THENOW

Shanghai Thenow Purification Technology Co.Ltd

Wine Cellar Cooling Units

Split System

User Manual

Apply Model: HSN-J30/J60/J90 (R32)

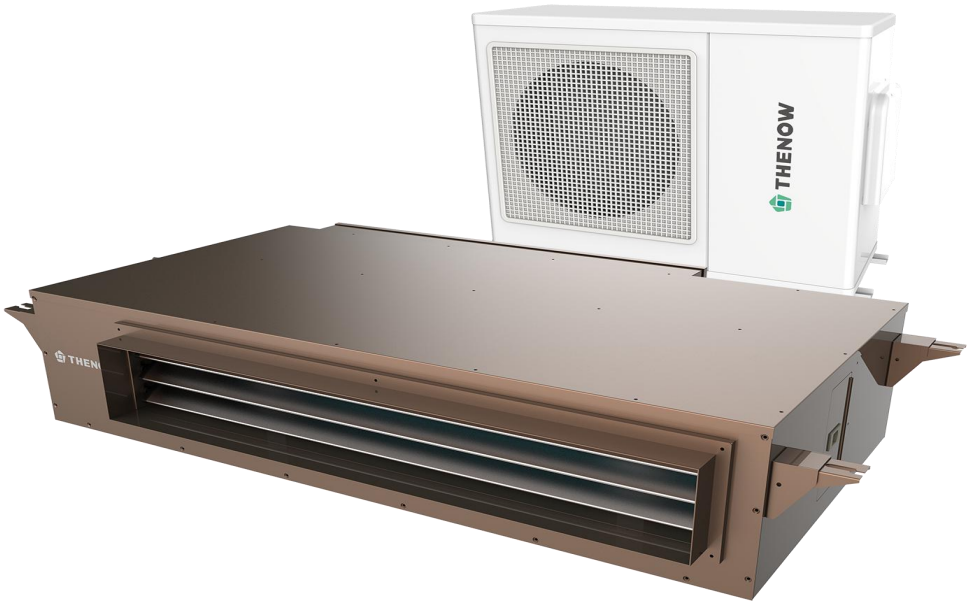

Thank you for purchasing this “Thenow”product;

Please read this manual carefully before attempting to install, operate or service;

Please retain this booklet for future reference.

Thank you for purchasing Thenow cooling system. We strive to provide the highest-quality products and the best possible customer service. If you have any questions about our system, please call us at 4001878599 or visit www.thenowair.com

!!! WARNING !!!

To avoid the risk of electrical shock , property damage , personal injure or death, please read the following instructions carefully with safety or warning labels.

*During transportation or moving, please follow the correct direction on the packing case.

* After transportation or moved, it needs to be allowed to stand for more than 24 hours before it can be turned on.

*Do not attempt to carry out any measurement, device replacement or other maintenance work not covered in this manual, otherwise it may lead to warranty failure, endanger normal operation, extend equipment downtime and increase additional maintenance costs.

Disconnect electric power from the appliance before performing any maintenance or repairs, failure to do so could result in death or electrical shock.

!!! WARNING !!!

1. Thenow wine cellar split system use eco-friendly, colorless, and odorless R32 refrigerant, which is flammable.

The R32 refrigerant is environmentally friendly, but flammable. It does not damage the ozone layer, nor does it increase the greenhouse effect. Care must be taken during transportation and setting up of the appliance that no parts of the cooling system are damaged. Leaking coolant can ignite and may damage the eyes.

2. The unit should be stored in an area free from continuous sources of ignition.

The unit should be kept away from areas with open flames, lit gas appliances, or operational electric heaters to minimize fire hazards associated with the flammable refrigerant.

3. Emergency procedures in case of refrigerant leakage.

In the event of refrigerant leakage, immediately open all doors and windows to ensure proper ventilation, cut off the power supply, evacuate the area, and contact a professional for repair.

4. Safety inspection prior to maintenance.

Before performing any maintenance or repairs on a wine cellar air conditioner that uses a flammable refrigerant, a thorough safety inspection must be conducted to ensure that the risk of fire is minimized.

Contents

1. Product Introduction.....2

2. Dimensions & Technical Data.....3

3. Installation & Debugging.....6

4. Introduction of Controller.....15

5. Maintenance.....19

6. Troubleshooting.....20

7. Warranty.....23

Product Introduction

Thenow wine cellar cooling units split system is intended for cellars without access to proper ventilation. They are known for their efficiency and longevity. Each unit is designed to maintain a consistent temperature and humidity in spaces where proper ventilation is not feasible. The units are functionally divided into two sections, the evaporator and the condenser. The evaporator is installed inside and the condensing unit can be placed as far as 25m away. Since it exhausts outside, split cooling systems operate quietly and reduce vibration inside the cellar, which is believed to negatively affect the quality of wine.

Features:

Auto cooling and heating mode, keep wine cellar under constant temperature.
Adopt circulating water wet-film auto control humidification system, wet film is made of Swedish organic polymer material with sterilization and disinfection function.
High energy efficiency, green energy saving
Intelligent control panel, famous brand sensors with stable quality, integrated ModBus connection
Control constant condensation temperature
Three speed air flow under auto control to maintain the ideal environment for long-term wine storage
Pull-out design wet film module, Sweden brand, easy to replace

Working Principle

1、Refrigeration

Using cycling vapor compression refrigeration system,when the compressor work, indraft low temperature and pressure refrigerant gas from evaporator, compressed by compressor into high temperature and pressure gas, and then into the condenser to condense into liquid, meantime release heat, after throttling under the function of the thermal expansion valve, entering into the evaporator and absorbed heat,then evaporate into gas, finally back to the compressor through the suction tube and complete a refrigeration cycle; On the other hand, through changing of refrigerant flow direction, total or partial condensing heat generated from refrigeration can be exhausted to outside,to achieve the purpose of adjusting the indoor temperature.

2. Dehumidification Principle

When the wet air flows through the evaporator surface, the air temperature will drop, when it falls below the dew point,the steam in the air will condense out, gathering and drainage of water pipes in the receiving plate, the controller automatically adjusts the compressor start-up time according to the setting humidity , so as to achieve the purpose of adjusting humidity.

3. Heating

Electric heating compensation.

4.Humidification

Adopt circulating water wet-film auto control humidification system, wet film is made of Swedish organic polymer material with sterilization and disinfection function.

Dimensions and Technical Data

Unit Dimension / Indoor Unit

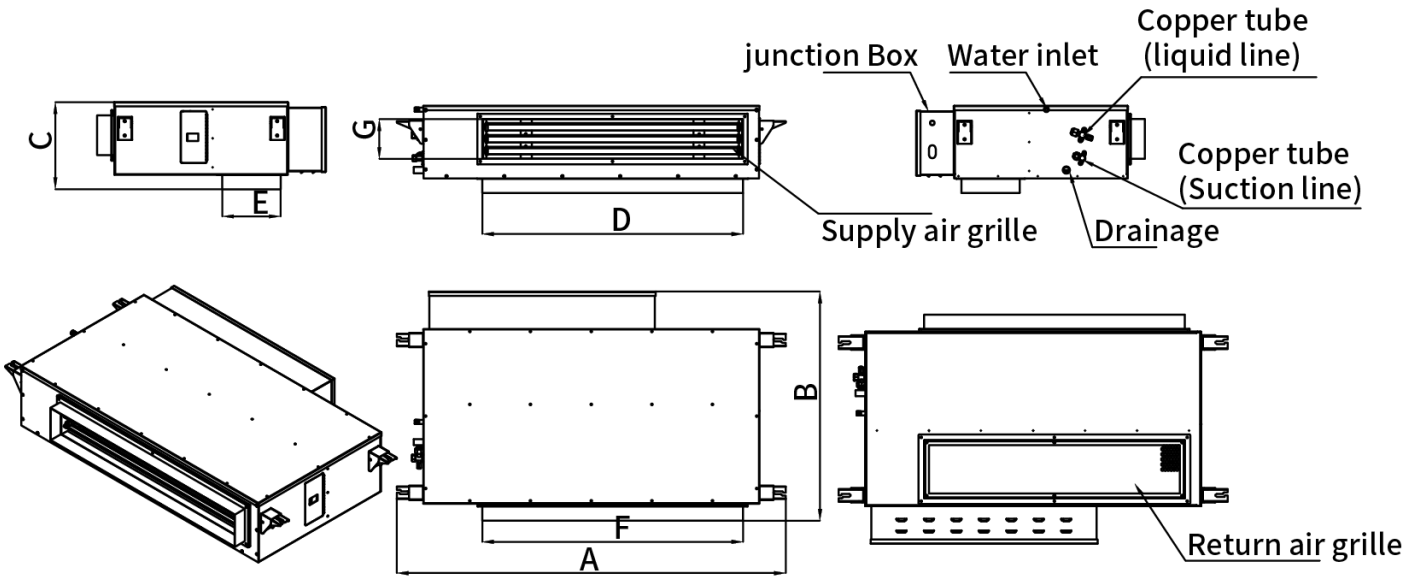

No.	Model	Size:mm						
		A	B	C	D	E	F	G
1	HSN-J30	945	790	300	572	202	462	137
2	HSN-J60	1345	790	300	902	202	902	137
3	HSN-J90	1545	790	300	1142	202	1022	137

Unit Dimension /Outdoor Unit

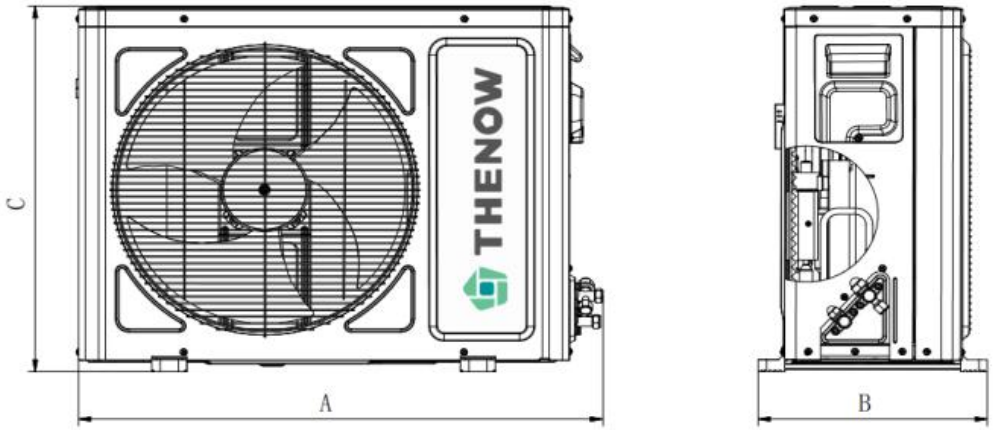

No.	Model	Size:mm		
		A	B	C
1	HSN-J30	860	300	540
2	HSN-J60	860	300	540
3	HSN-J90	1000	405	870

Technical Data

Model	Unit	HSN-J30	HSN-J60	HSN-J90
Cellar Size (Up to)	m³	30	60	90
Power	V/HZ	220V/50Hz		380V/50Hz/3PH
Cooling	KW	1.4	3.2	5.0
Heating （Electrical）	KW	4	6	9.0
Air Flow(M）	m³/h	450	740	900
Static Pressure	Pa	30	30	40
Nosie	dB（A）	50	50	53
Refrigerant	/	R32		
Control	PC Full-touch smart control			
Temperature	℃	10～18，±2		
Humidity	%	50～70，±5		
Total Power	KW	5	7.4	11.9
Humidifier	Type	Wet-film		
Humidification	Kg/h	2	2	4
Indoor Unit Size	L*W*H（mm）	945*790*300	1345*790*300	1545*790*300
Outdoor Unit Size	L*W*H（mm）	860*300*540	860*300*540	1000*405*870
Tube Connection	Liquid(mm)	6.35	9.52	9.52
	Gas(mm)	9.52	12.7	15.88
Drainage	mm	20	20	20

Note: Cellar inside dry-bulb t=12℃ 60% Outside dry-bulb t=35℃，wet-bulb t=28℃

There are several factors such as glass,stone,concrete,insulation,ambient temperature,ventilation etc. which will change the required amount of Kw needed to properly cool your wine room or wine cabinet. We strongly recommend you contact us or our distributors beforehand to help choose the model suitable. We do not bear the losses caused by the selection errors caused by the above reasons.

Installation and Debugging

IMPORTANT NOTES FOR INSTALLATION

When building a wine cellar, it is essential to insulate it. Traditional building materials such as brick, concrete and glass are NOT good insulators. Failure to insulate your custom wine cellar will essentially put additional load on the conditioning system & void manufactures warranty. Cellar space MUST be insulated with Kingspan K17/K18 (or equivalent insulation panels).

Any glass doors/windows/panels must be double glazed argon gas filled min 6mm/12mm/6mm.

Calculated M3 measurement of the cellar MUST be less than the highest capacity the unit is engineered to service.

Identify gas pipe run in the user manual to ensure horizontal & vertical measurement meets recommendations

No other equipment that can expel heat, such as fridges, should be housed in the cellar space as it will compromise temperature & humidity control.

All trades involved with installation must be registered:

- HVAC technician
- Plumber
- Electrician

The units are to be installed as recommended allowing ease of access for any future maintenance for both indoor and outdoor units.

Pre-installation Inspection

Use caution when lifting and check package for damage

A. Check the outer packing for breakage.

B. Machine model (nameplate), check whether it is consistent with what you ordered.

C. The appearance of the whole machine is intact.

D. A shipment may include one or more boxes containing accessories, please check all shipped boxes for the following contents.

Note: Each model of the Thenow ceiling-mounted split cooling system contains two wooden boxes-- the indoor unit case and the outdoor unit case. For details, please refer to the label affixed to the box.

Indoor unit case includes:

-- 1 Fan-coil unit
-- Gas tube 3m
-- 1 Return air flange
-- 1 Control panel
-- 1 Mounting kit
-- Insulation cotton 6pcs

Outdoor unit case includes:

-- 1 Condensing unit

Remove the unit from box. Check for any signs of concealed damage, and that all mentioned items above have been provided. Contact Thenow or its authorized distributor immediately if components are missing or damaged during transportation

Warning: Our company is not responsible for any accident caused by opening the panel and electric control cabinet without the permission of the company.

If the units arrived without gas, during the transportation of air conditioners, nitrogen has been used for pressure preservation, the steps for adding refrigerant before use typically include the following stages:

1. **Pressure Test for Leak Detection:** Initially, a pressure test is conducted to check for any leaks in the air conditioning system by pressurizing it with a certain amount of nitrogen and observing whether the pressure remains constant. If there is a pressure drop, leaks need to be located and repaired.

2. **Vacuuming:** After confirming there are no leaks, the next step is to vacuum the system. A vacuum pump is used to remove non-condensable gases and moisture from the system's pipes, ensuring the interior is dry and clean. The vacuuming process typically takes about half an hour until a vacuum degree of -0.1MPa or higher is achieved. When vacuuming, keep the interface valve on the vacuum pump unit half open, and keep all other valves in the system fully open.

   Note: For split unit models J90 and J150, the liquid line solenoid valve will not open automatically after power is applied. To vacuum properly, disconnect the two wires (one live, one neutral) of the check valve on the liquid line from the main board, and connect them to a separate 220V power supply. After vacuuming is complete, reconnect the wires to the main board.

   If you are unsure how to do this, please ask your supplier for a video guide.

3. **Adding Refrigerant:** After vacuuming is complete and the required vacuum level is confirmed, start charging refrigerant. The refrigerant must be charged in liquid form from the high-pressure side (auxiliary valve port). Never charge liquid refrigerant from the suction pipe auxiliary valve port. Be sure to purge the air from the charging hose to prevent air from entering the system.

4. **Weighing Charge Method:** The most accurate method of charging is the weighing charge method, which involves weighing the amount of refrigerant added to ensure it complies with the manufacturer's specifications(Charging weight indicated on the nameplate of the machine).

5. **System Commissioning:** After adding the refrigerant, the air conditioning system needs to be commissioned to ensure it operates normally.

Please note that these steps should be carried out by professional air conditioning installation or maintenance technicians to ensure safety and effectiveness. Throughout the process, it is strictly forbidden to use oxygen for pressurization, as contact between oxygen and the refrigeration oil in the system may cause an explosion. Also, changes in ambient temperature can affect the pressure of nitrogen, necessitating appropriate pressure correction.

Installation Sketch

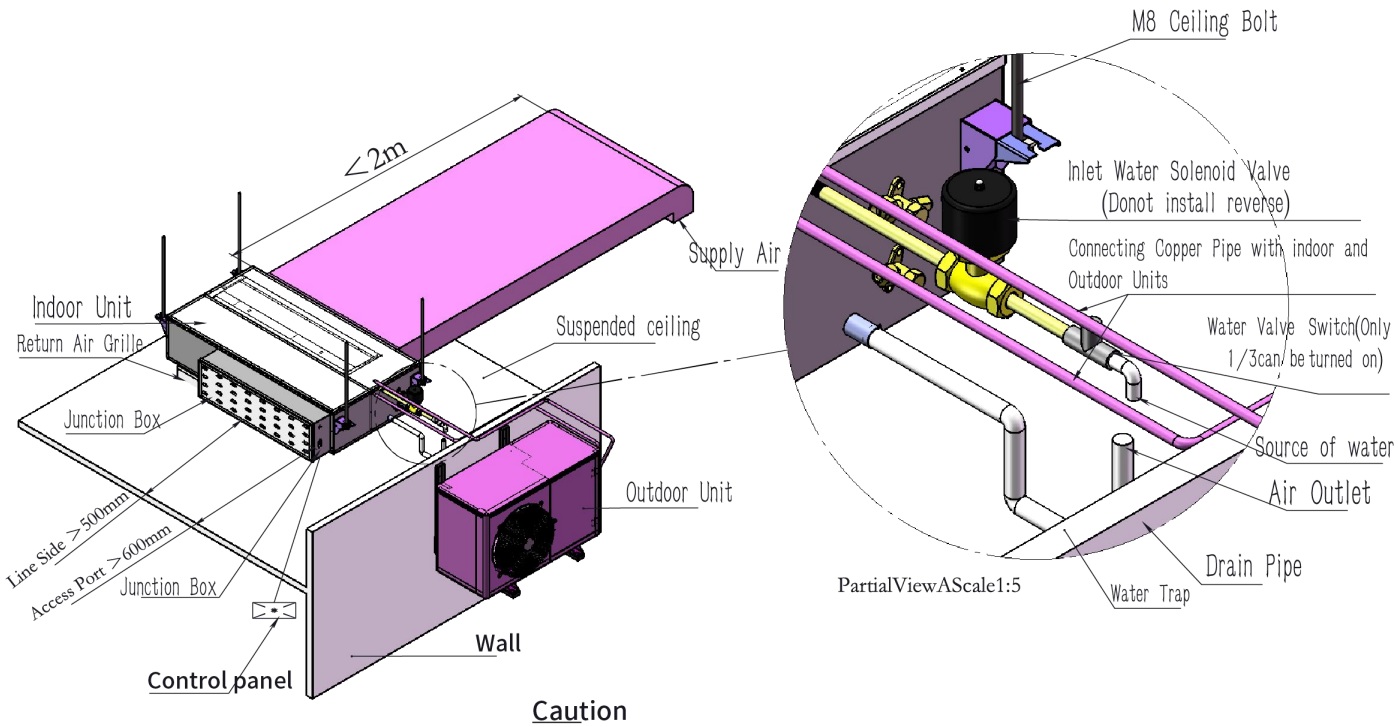

Caution

1. Inspection port on the ceiling must be reserved under the junction box near the piping side,size must be confirmed with manufacturer or dealer beforehand.
2. To make sure the unit in good running,please install the unit strictly according to the above sketch and keep the supply air and return air smoothly.
3. Water inlet solenoid valve must be installed by qualified person(s), and connect the wiring to the reserved port of the junction box.
4. Standard pipe length is 5m,less than 5m no need to add refrigerant. If more than 5m,excess length adding refrigerant according to standard 70g/m.
5. PVC drain pipe is acceptable, the size must be greater than or equal to the condensate water pipe and the shorter the better, keeping at least 2% downward. Meantime,water trap and air outlet port must be installed according to the above sketch.
6. The installation length of the outlet pipe does not exceed 2m, otherwise it will affect the performance of the unit.

As following, please refer to the appendix or contact with THENOW directly for the maximum connection distance of unit copper pipes and the supplementary refrigerant filling.

Appendix I: Refrigerant charge under default value of 3m distance between indoor unit and outdoor unit.

Model	Refrigerant	Refr.Charge
HSN-J30	R32	700g
HSN-J60	R32	1800g
HSN-J90	R32	2000g

Appendix II: Recommended distance between evaporator and condenser.

Model	Horizontal Distance	Vertical Distance
HSN-J30	≦15m	≦3m
HSN-J60	≦18m	≦5m
HSN-J90	≦22m	≦6m

Note: You must consider the max. distance of the different models when increasing the distance.

Appendix III: If distance exceed 3 meters(actual installation distance must be in the scope of our max. value in the above sheet), extra refrigerant charge, please take reference of the below sheet.

Refrigerant Type: R32

Tube Size(mm)	Refrigerant charge per extra 1m
Φ6.35	0.022kg
Φ9.52	0.054kg
Φ12.7	0.110kg
Φ15.88	0.170kg

Installation Conditions

Indoor unit :

1. When the machine is hoisted, the lifting bracket must be vertical and the install surface is flat. Meantime, the ceiling joists must be able to bear the weight of the unit.
2. To keep good ventilation and easy maintenance,requires that there must be more than ≥400* 600mm maintenance space around and at the top of the equipment.
3. Never install the unit in danger areas,such as strong magnetic,steam,dust,heating source,corrosion and combustible gases etc.
4. **30mm insulation cotton** needs to be added on indoor unit surfaces (including gas tube) to prevent condensate water.
5. Never reduce the diameter of the drainage pipe by yourself when installing the drain line.
6. To avoid any possible water leaking, water flow gauge(**HVAC guys prepare it by themselves**) is suggested to be installed. Otherwise, the water will always be supplied to the machine in a normally open state, which will cause the equipment to leak and fail to operate.

   Below suggested water flow rate of Thenow split cooling units for your checking: (Unit: L/M)

Model	HSN-J30	HSN-J60	HSN-J90
Inlet Water Rate	1	1.8	2.4

Normal tap water pressure scope: 0.15MPa ~ 0.35MPa

Note:

⚠ **Water flow rate MUST remain low as per above values. If the supply water pressure is changed, you MUST readjust the water flow rate to ensure they meet the recommended values. Thenow and its distributors will not be liable for any possible loss caused by water leakage.**

⚠ **Ensure smooth drainage**

7. Recommended materials for commonly used air duct:

A: Thermal insulation board, 15-20mm thickness.

B: Stainless steel air duct, 20mm insulation outside.

Outdoor Unit：

1. Good heat dissipation must be ensured.
2. The load-bearing capacity of the unit installation frame shall not be less than 4 times of the unit weight.
3. If mounting in the ground, the unit must above normal snowfall levels.
4. The condensing unit shall not be installed in a common area such as aisles, corridors, and exits inside the building.
5. The condensing unit should be as far as possible away from the adjacent doors and windows and green plants, and the distance between the door and the window shouldn't be less than 3 to 4 meters.
6. The copper pipe must be insulated, and the thickness of the insulation cotton is ≥15mm.

Note: Placement of the conditioning unit allowing future access for any future maintenance is essential for ease to access the indoor & outdoor units. If access to the unit is hindered this will also void technicians labour on warranty claims.

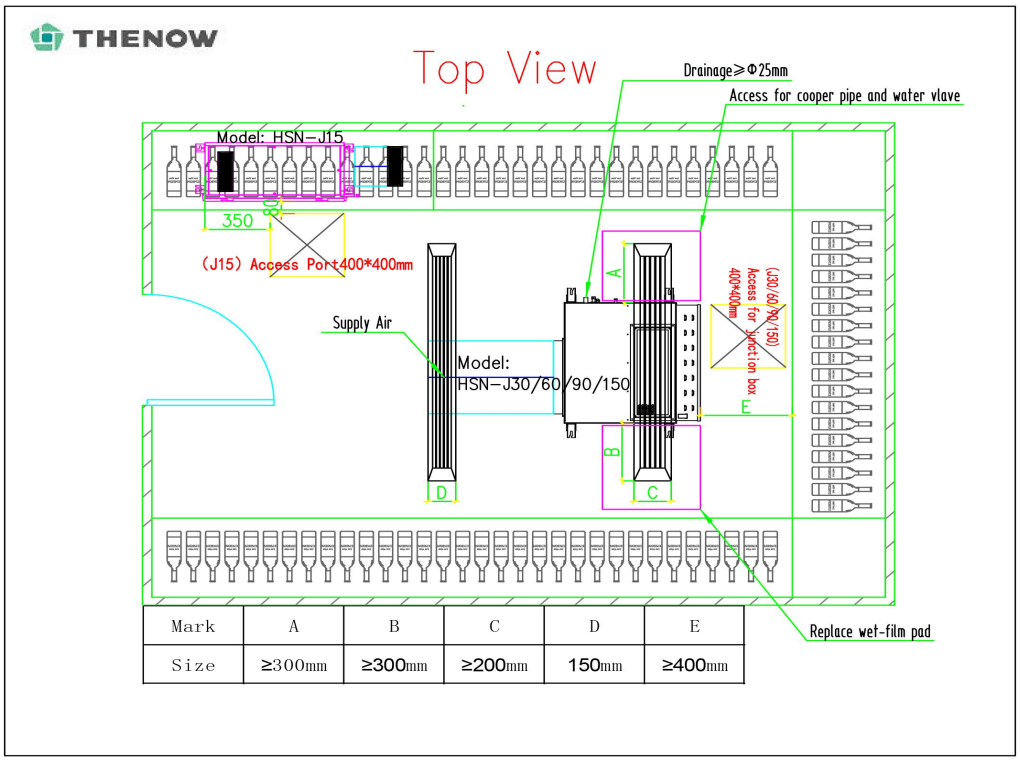

Mark	A	B	C	D	E
Size	≥300mm	≥300mm	≥200mm	150mm	≥400mm

Wiring

Model: HSN-J30

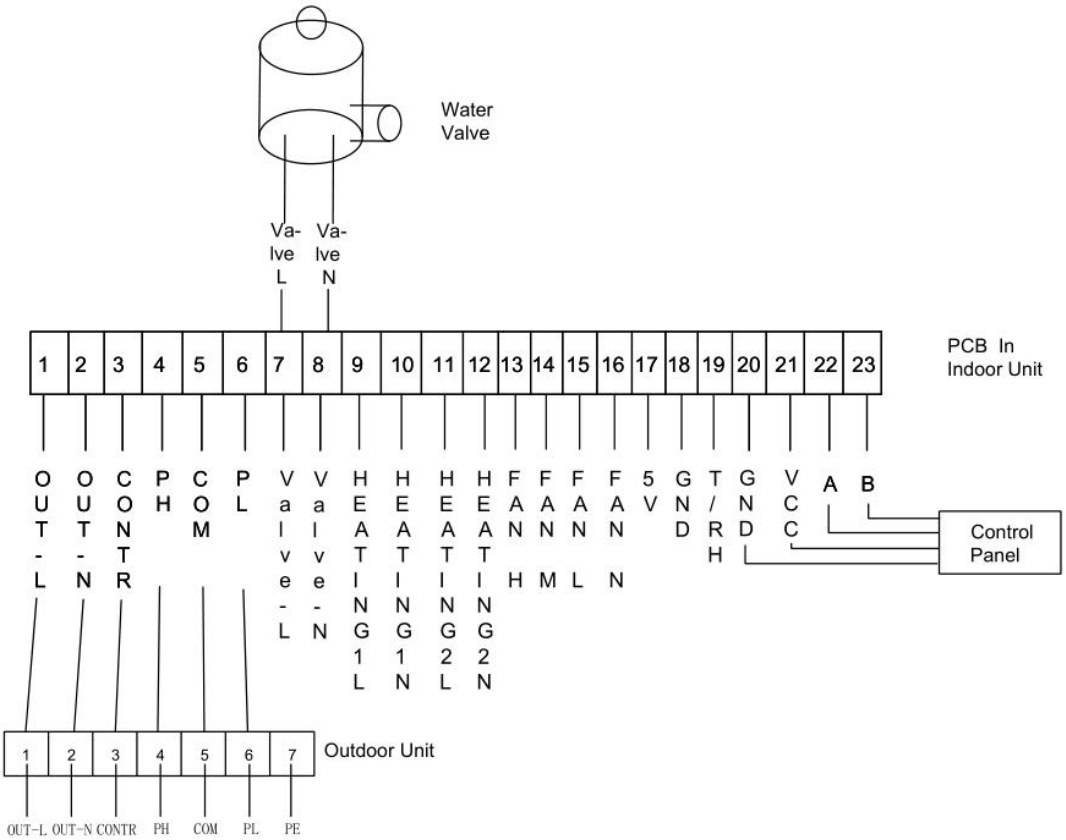

Model: HSN-J60

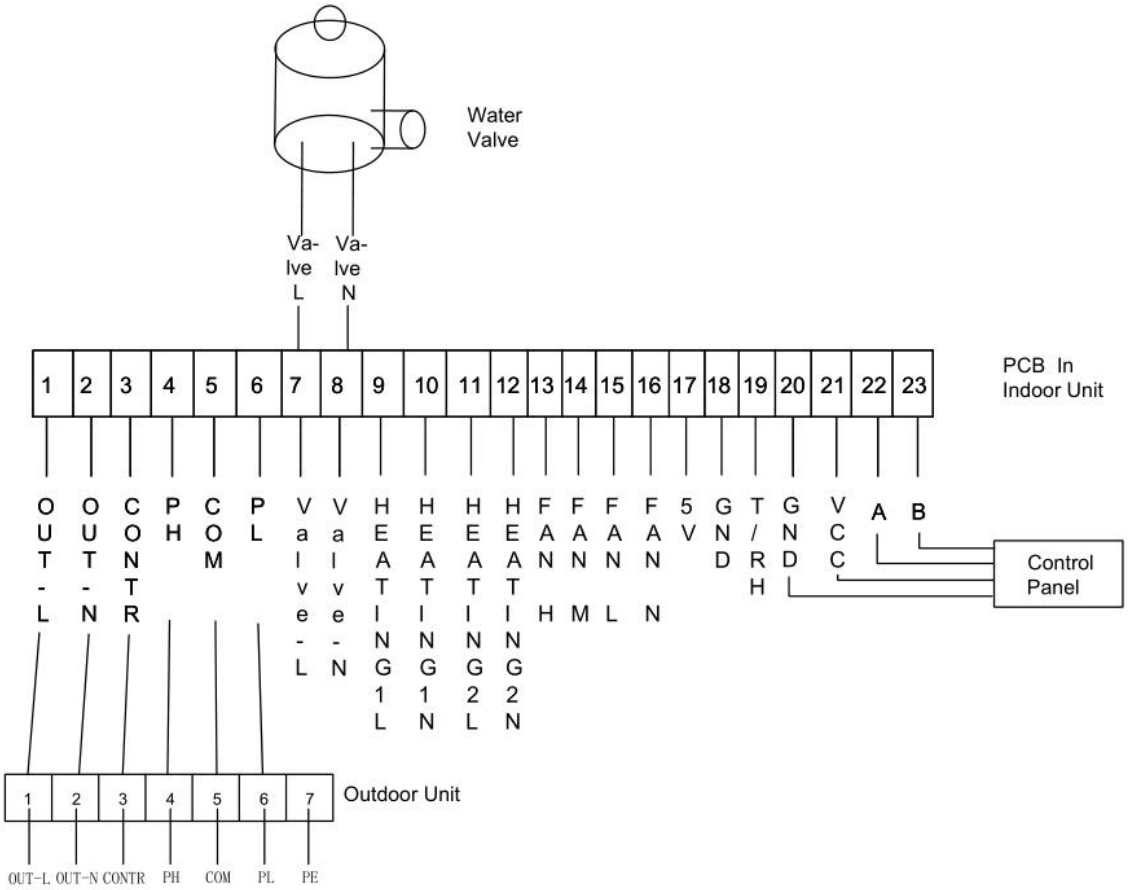

Model: HSN-J90

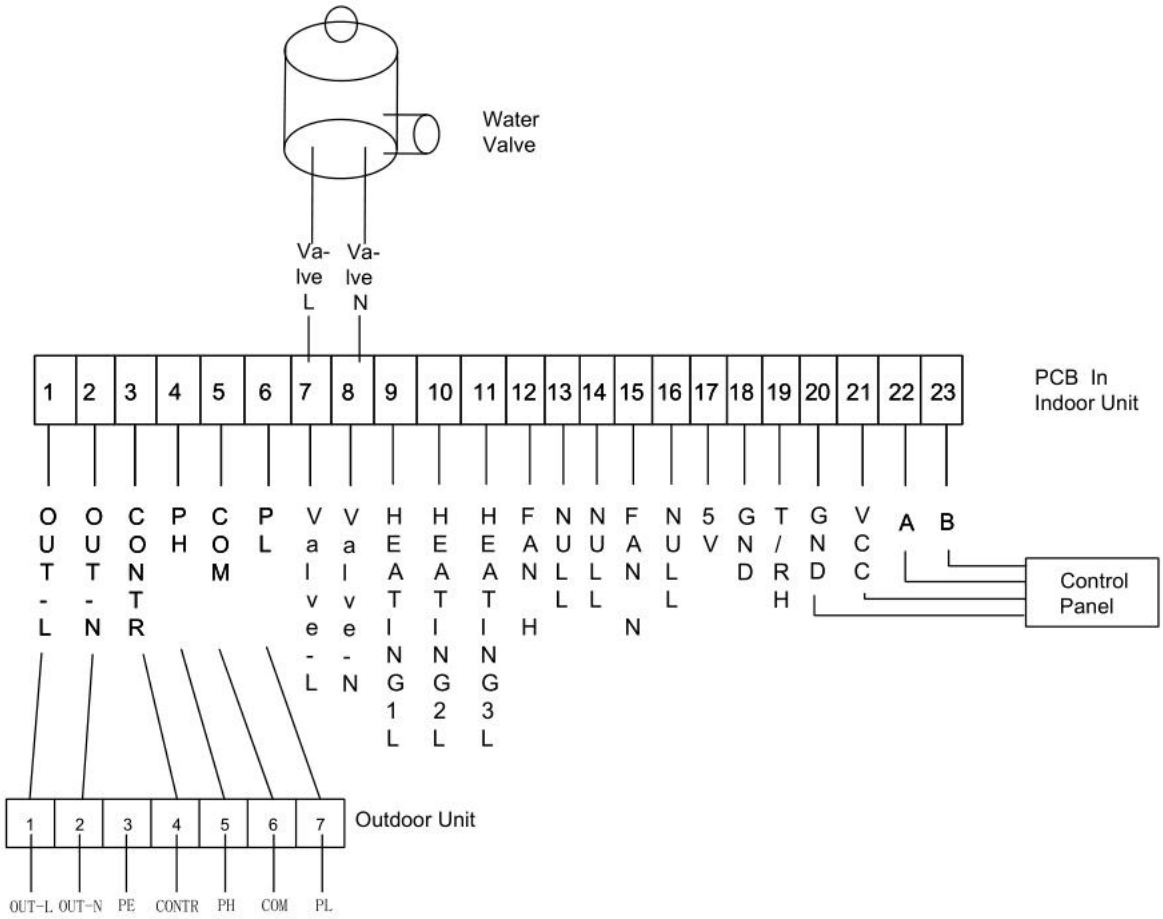

Online Debugging

Note: Always operate this machine from a 220V 1 phase or 3-phase 380V, 50Hz power source, and the fluctuation amplitude does not exceed 10%, the junction box capacity meets the equipment electrical using requirements; Take reference to the internal electrical schematic diagram of the unit, connect the indoor unit and outdoor unit, and ensure that the unit is effectively grounded.

1. Power the machine.
2. Set the operation mode, temperature and humidity (For setting methods, please check the operation section of the controller in the user manual)
3. Humidity setting value is 95% (higher than the ambient humidity) and temperature is set at 8℃ (lower than the ambient temperature), the setting operation mode is auto. Then cooling, heating and humidification will be calling automatically according to the setting value.
4. Keep the machine running at least 30 minutes.

After the machine runs for 30 minutes:

1. Check the alarm record. If all functions work well, no alarm record will be generated.
2. Check the machine for leaks. In case of leakage, first check whether the drainage is smooth. If so, reduce the opening of the ball valve to reduce the inlet water pressure. Run the machine for half an hour again and check whether the leakage problem is solved.
3. Check whether the temperature is lower than that when the machine is started. Generally, the coil temperature is reduced by 5-14℃ as the normal range.
4. Check whether the humidity is higher or the same as when the machine is turned on.
5. If the cooling, heating and humidification of the equipment can operate normally and there is no water leakage, the debugging work is completed.

Note:

After transportation or moved, it needs to be allowed to stand for more than 24 hours before it can be turned on. The system is designed to maintain a cellar temperature of 10-18℃ as long as the outside ambient temperature does not exceed 43℃ or no less than 5℃.

TIPs: Save your box and all packaging materials, they provide the only safe means of transporting/shipping the unit .

Introduction of Controller

Controller Introduction:

CK-4C-86 series controller is a new type of controller to realize intelligent control of constant temperature and humidity for a wine cellar and wine cabinet cooling units,which is widely used in precise temperature control places with small volume.

The controller adopts 4-inch large -screen colorful display technology,timing control,automatic/manual control of air flow speed , automatic operation of the appropriate air flow speed , comfortable energy saving , accurate and reliable.

Functional features:

1. With 4-inch capacitive full-touch display, clear picture and easy to operate.
2. Real-time display of temperature, humidity and clock .
3. Timing control.
4. Fan speed manual/automatic control selection.
5. Multiple operating mode options.
6. Built-in advanced parameter settings,manufacturers can freely set according to different customer needs.
7. Standard 86 mounting bottom case for quick and easy installation.
8. Power off and restart function.
9. Alarm can be remembered.

Technical Specifications:

Power Supply	PCB：AC220V±10%　50/60HZ
	Display：DC12V
Shall Material	Flame retardant ABS+PC
Power	<12W
Pich of Installation	60mm
Size	PCB：123mm×85mm
	Display：91mm×90mm
Storage Environment	-10~~70℃　5%~~95%RH
Working Condition	-10~~70℃　5%~~95%RH

Please connect in strict accordance with the product wiring diagram, wiring must be disconnected from the power supply ,if any abnormality occurs, please cut off the power supply and contact the manufacturer as soon as possible. Non-professionals should not disassemble it in order to avoid danger.

Product installation:

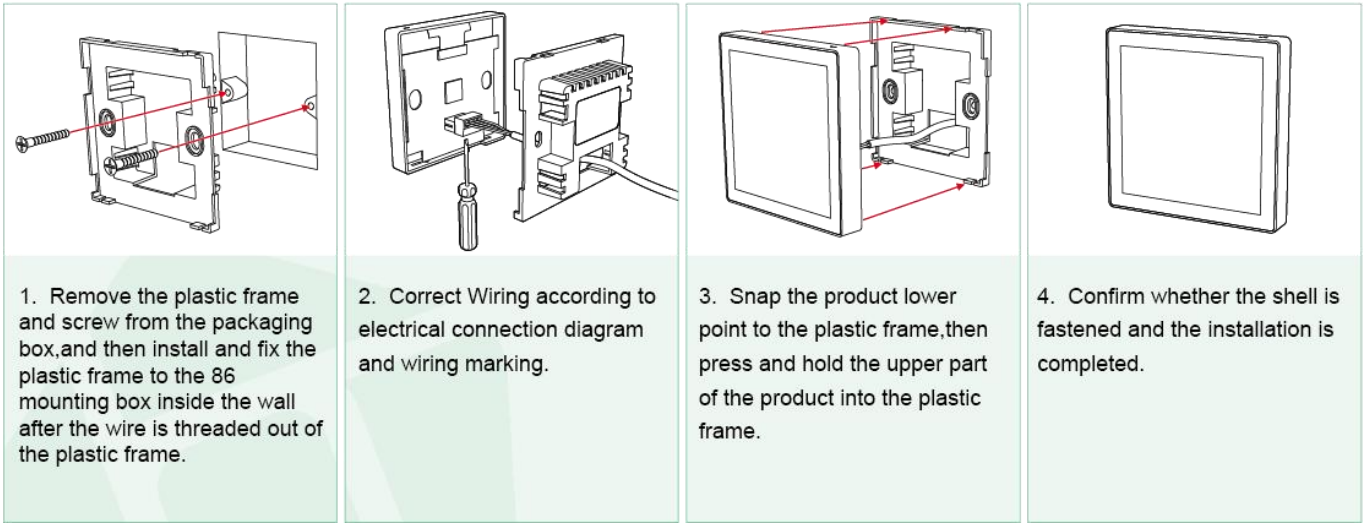

1. Remove the plastic frame and screw from the packaging box,and then install and fix the plastic frame to the 86 mounting box inside the wall after the wire is threaded out of the plastic frame.

2. Correct wiring according to electrical connection diagram and wiring marking.

3. Snap the product lower point to the plastic frame,then press and hold the upper part of the product into the plastic frame.

4. Confirm whether the shell is fastened and the installation is completed.

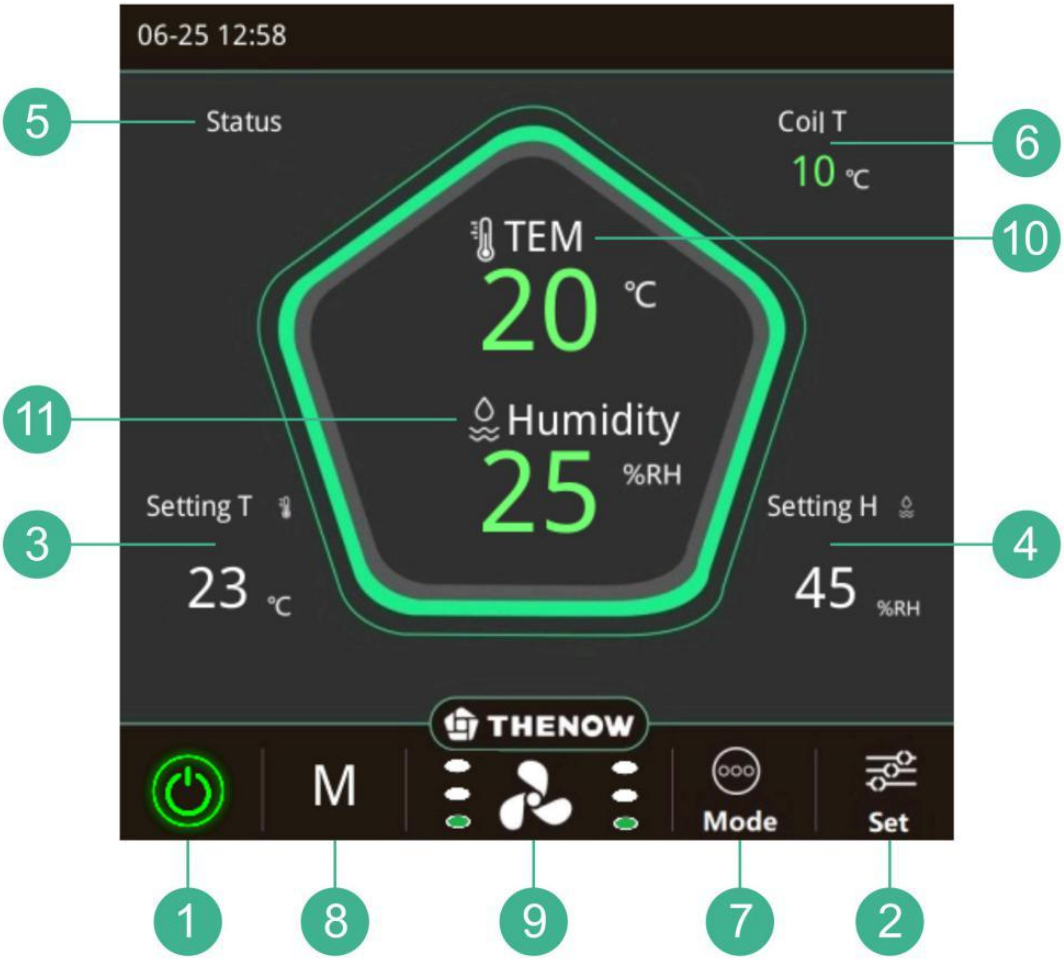

Functions:

1. Power ON/OFF 2. Set (humidity/temperature/time etc.)

2. Setting temperature 4. Setting humidity

5.Running mode display (Constant Temperature/Constant Humidity/Auto/Ventilation)

6. Coil temperature 7. Running Mode Setting

8. Fan running mode(Manual/Auto)

9. Fan air flow setting(Only when fan running mode at “Manual”)

10.Cellar temperature

11.Cellar humidity

Turn system ON/OFF		Touch the switch icon in the lower left corner to turn on or off the unit Color red is on and green is off
Set temperature		1. Touch icon 'Set' 2. Find 'Temperature' , click to enter and set temperature
Set humidity		1. Touch icon 'Set' 2. Find 'Humidity' , click to enter and set humidity
Set time		1. Touch icon 'Set' 2. Find 'Time' , click to enter and set time
Mode		Touch icon 'Mode' to choose the running mode, default value is 'Auto'
Fan Running Mode		Touch icon next to the switch, choosing the running mode of the fan at 'A' or 'M' (A-Auto running speed, M-Selecting running speed manually)
Set the fan speed (Only available at the fan work under "Manual" running mode)		Touch the fan icon to change the fan speed

Maintenance

Using Requirements

1.Working conditions: evaporator unit use temperature :5℃-35℃, relative humidity lower than 90% ;condensing unit use temperature:5-43℃.Please use the equipment strictly in accordance with the specified environmental and temperature conditions.

2. Please make certain power supply is specified voltage, it's strictly prohibited to operate equipment with phase missing or under voltage.

3.This product is a non-explosion-proof product. Please do not use the unit in the environment with flammable or explosive gas.

4. It is forbidden to disassemble, process, modify or repair the machine without authorization. Otherwise there is a danger of abnormal movement, electric shock or fire.

5 .If the equipment has not been used for a long time ,please make sure to turn off the power.

Cleaning

Disconnect electric power from the appliance before any operation, otherwise there will be the risk of electric shock.

(1) Because the temperature probe is a sensitive element,in dusty place,please use low pressure water to clean regularly (for example,with the dust ball blowing wash),when the accuracy become poor ,please correct or replace.

(2) Always check if the contact between the electrical plug and the socket of the machine is good. If the power lead wire or plug is hot when the machine is running, it may be that the electrical wiring is too thin or the plug or socket is in poor contact. Measures should be taken to solve it.

(3) Always observe if there is refrigerant leakage at the interface of the refrigerant circuit of the machine. If there is oil stain, it means that the refrigerant leaks out, it should be treated in time to avoid leakage of the refrigerant for a long time, which will affect the refrigeration (heat) effect of the air conditioner and even cause damage to the compressor.

(4) Clean the condenser and evaporator coils of the machine regularly. Use a brush and a vacuum cleaner to clean the dust on the coil. Note that the brush and vacuum cleaner should be cleaned in the vertical direction of the coil during cleaning. Do not sweep in the horizontal direction to avoid damaging the ribs of the coil.

(5) Clean the air filter of the machine regularly. It is usually cleaned in about 3 to 6 months (depending on the site conditions). When cleaning, pull out the filter and use a dry soft brush to filter the dust on the net. It can also be cleaned with water to filter dust on the net.

Do not replace the filter while the machine is working

Troubleshooting

WARNING

Disconnect electric power from the appliance before performing any maintenance or repairs,failure to do so could result in death or electrical shock.

- If maintenance is needed, wait for 3 minutes after power failure (let capacitor discharge on PCB), and then open the maintenance door.
- The surface temperature of the condenser may be very high. Do not touch it to prevent burns.
- Even if the fan and compressor have stopped ,there is still a dangerous voltage at the terminals of the starting capacitor.

The below information is for reference only. If the machine fails to work properly, please contact your local dealer or your local authorized repair station.

All electrical installation and maintenance work in this manual must be performed by a professional electrical engineer.,our company is not responsible for opening the panel and electric control cabinet without the permission of the company.

Troubleshooting

Status	Reason	Suggestion
Cooling unit not running	1. No power. 2. Power cord unplugged. 3. Low voltage. 4. Incorrect or loose wirings. 5. Ambient temperature above 35°C or lower 5°C. 6. Setting higher than ambient temperature. 7. Defrosting mode on.	1. Check power at receptacle &fuses. 2. Plug-in power cord plug. 3. Contact an authorized electrician. 4. Check all wirings and connections. 5. Ambient temperature not meet unit working conditions. 6. Lower temperature setting . 7. Wait 5-30minutes.
Cannot dehumidification	1. Inlet or outlet air grille is stuck. 2. Air filter is stuck. 3. Refrigerant leakage. 4. Compressor not working. 5. Fan is not working	1. Please check the air grille and clean it. 2. Check air filter. 3. Add refrigerant. 4. Check whether the compressor is normal. 5 Check the fan.
No air exhaust	1.The air supply is blocked. 2. Fan is not working.	1. Check and clean air outlet. 2. Check the fan.
Louder noise	1. Loose parts. 2. Air filter is stuck. 3. The unit is not installed smoothly.	1. Check parts. 2. Clean filter. 3. Install the machine smoothly.
Temperature too high	1. Setting too high. 2. Improper cabinet seals. 3. Ambient temperature too high. 4. Cabinet/room too large. 5. Fan fault. 6. Refrigerant leakage.	1. Lower setting. 2. Check gasket and door opening. 3. Check installation location. 4. Check for excessive size or the machine model choice is improper. 5. Check both evaporator and condenser fans. 6. Add refrigerant.
Unit running too long or continually	1. The machine model choice is improper or improper room sealing. 2. Ambient temperature to high.	1. Check machine mode or check room tightness. 2. Check installation location or increase setting.
Evaporator icing	1. Evaporator airflow restricted. 2. Unit not stopping due to air leak,high ambient temperature or low setting. 3. Low ambient temperature. 4. Bad thermostat or sensor. 5. Refrigerant leaking. 6. Expansion valve blockage.	1. Check the fan. 2. Check fr seal,door opening,ambient temperature and setting. 3. Defrost the unit 4. Check for thermostat and sensor. 5. Check for sealed system leakage. 6. Check for low side pressure.
The fan keeps running	1. Fan protection procedure. 2. Wrong wiring harness connection.	1. Wait 3 minutes. 2. Check harness links.
No cooling but compressor running	1. Refrigerant leakage. 2. Evaporator airflow restricted.	1. Check of refrigerant. 2. Check for airflow through evaporator.

Fault Code Table

Fault Code	Fault	Possible Cause	Solution
E1	Three-phase Alarm	Phase loss in three-phase power	Check if the three-phase power supply is normal
E2	High Voltage Protection	1. Dirty or clogged filter 2. Blocked air vent 3. Fan not working	1. Clean the filter 2. Clear the air vent 3. Inspect the fan
E3	Low Voltage Protection	1. Refrigerant leakage in the piping 2. Fan not working or is dirty/clogged	1. Contact a professional for repairs 2. Inspect the fan
E4	Compressor Overload Protection	1. Excess refrigerant charge 2. Mismatched rated voltage 3. Excessive pressure	1. Check if the refrigerant charge exceeds the rated amount. 2. Check if the line voltage matches the rated voltage. 3. Check for blockages in the compressor's inlet and outlet.
E5	Temperature and Humidity Sensor Fault	1. Sensor wire disconnected 2. Sensor damaged	1. Check the disconnected wiring and plug it back in 2. Replace the sensor
E6	High Temperature Alarm	Temperature exceeds 40 degrees	The machine has entered self-protection mode; it will resume operation when the temperature drops below 40 degrees.
E7	Coil Temperature Sensor Fault	1. Sensor wire disconnected 2. Sensor damaged	1. Check the disconnected wiring and plug it back in 2. Replace the sensor
E8	Water Level Alarm	The drain outlet is blocked, and the water level in the internal drip tray has reached the alarm threshold.	Clear the drain outlet.

Warranty

Limited Warranty

The machine provided by our company is guaranteed for one year and the fan is guaranteed for two years and the compressor for three years from the date of arrival. During the warranty period, any defects due to workmanship or materials, we guarantee to repair or replace the machine free of charge. (warning: the machine due to the use of dust ,corrosive liquid and other non-machine quality reasons for damage is not covered by the warranty.

Thenow company guarantee the project for 1 year, the fan is guaranteed for 2 years and the compressor for 3 years from date of delivery. During the warranty period, any defects due to workmanship or materials Thenow guarantee to repair or replace the machine free of charge.

Warranty Claims

Proof of insulation (photo images & specification) will be requested on warranty claims.
If access to the unit is hindered this will also void technicians labour on warranty claims and/or refusal to undertake works until the unit is moved to meet installation guidelines.

Warning the machine is not covered by warranty if the unit is installed within the guidelines stated above & in the user manual and is not maintained by regular cleaning of the condenser for removal of dust, has been misused, abused or neglected, has any contact of corrosive liquid, and other non-machine quality reasons for damage.

Remove - Commitment in after-sales service

During the warranty period, our company is responsible for the maintenance of the equipment，if the equipment exceeds the warranty period, our company will charge for reasonable maintenance cost.

Other preferential terms

Our company provides free technical advisory services to users.

Thenow Australasia

Unit 10
38 Corporate Blvd
Bayswater Vic 3153

www.thenowair.com.au

Email: info@thenowair.com.au
Tel: 1800 934 015