Shanghai Thenow Purification Technology Co.Ltd

Wine Cellar Cooling Units

Inverter Type

User Manual

Apply Model: VHSN-J15

Thank you for purchasing this "Thenow" product;

Please read this manual carefully before attempting to install, operate or service;

Please retain this booklet for future reference.

Thank you for purchasing Thenow cooling system. We strive to provide the highest-quality products and the best possible customer service. If you have any questions about our system, please call us at 4001878599 or visit www.thenowair.com

General Safety Instructions

A. General Safety Precautions

!!! WARNING !!!

To avoid the risk of electrical shock , property damage , personal injure or death, please read the following instructions carefully with safety or warning labels.

*During transportation or moving, please follow the correct direction on the packing case.

* After transportation or moved, it needs to be allowed to stand for more than 24 hours before it can be turned on.

*Do not attempt to carry out any measurement, device replacement or other maintenance work not covered in this manual, otherwise it may lead to warranty failure, endanger normal operation, extend equipment downtime and increase additional maintenance costs.

Disconnect electric power from the appliance before performing any maintenance or repairs, failure to do so could result in death or electrical shock.

B. Refrigerant

!!! WARNING !!!

1. Thenow wine cellar split system use eco-friendly, colorless, and odorless R32 refrigerant, which is flammable.

The R32 refrigerant is environmentally friendly, but flammable. It does not damage the ozone layer, nor does it increase the greenhouse effect. Care must be taken during transportation and setting up of the appliance that no parts of the cooling system are damaged. Leaking coolant can ignite and may damage the eyes.

2. The unit should be stored in an area free from continuous sources of ignition.

The unit should be kept away from areas with open flames, lit gas appliances, or operational electric heaters to minimize fire hazards associated with the flammable refrigerant.

3. Emergency procedures in case of refrigerant leakage.

In the event of refrigerant leakage, immediately open all doors and windows to ensure proper ventilation, cut off the power supply, evacuate the area, and contact a professional for repair.

4. Safety inspection prior to maintenance.

Before performing any maintenance or repairs on a wine cellar air conditioner that uses a flammable refrigerant, a thorough safety inspection must be conducted to ensure that the risk of fire is minimized.

Contents

1. Product Introduction.....5

2. Dimensions & Technical Data.....6

3. Installation & Debugging.....9

4. Introduction of Controller.....20

5. Maintenance.....25

6. Troubleshooting.....27

7. Warranty.....31

Product Introduction

Thenow Split-Type Inverter Wine Cellar Air Conditioning System

The *Thenow Split-Type Inverter Wine Cellar Air Conditioning System* is a premium climate control solution specifically engineered for optimal wine storage. Unlike standard split-type systems, it features advanced inverter technology that automatically adjusts the compressor frequency according to the cellar's temperature and humidity needs, ensuring precise and stable conditions at all times.

Designed for energy efficiency, this system significantly reduces power consumption and long-term operating costs. It delivers smooth, quiet operation, extended service life, and consistent performance—making it ideal for preserving the quality and longevity of your wine collection.

Perfectly suited for **private wine cellars, luxury clubs, boutique wineries**, and other high-end environments, the Thenow inverter system is the ultimate choice for discerning individuals who value a refined, high-quality lifestyle.

Features:

- **Inverter Compressor** – Delivers precise temperature and humidity control with significant energy savings, reducing long-term operating costs.
- **Swedish Organic Wet-film Pad** – Utilizes circulating water for natural, energy-efficient, and safe humidification. The pull-out design allows easy replacement, saving time and effort.
- **Smart Touch Control Panel** – Equipped with branded sensors for accurate temperature control and three-speed automatic airflow adjustment.
- **Optimized Airflow Design** – Ensures quiet operation while maintaining positive-pressure drainage for efficient and stable condensate removal.
- **Nickel-Plated Evaporator** – Enhances corrosion resistance for extended durability.
- **Condenser Waste Heat Recovery** – More energy-efficient compared to traditional electric heating.
- **Side Air Return Vent** – Enables flexible installation to suit diverse application scenarios.
- **Built-In Electrical Box** – Compact design with integrated component control for stable performance.
- **Water Level Alarm** – Avoids overflow accidents, minimizing potential damage and after-sales issues.
- **R32 Refrigerant** – Eco-friendly with zero ODP (Ozone Depletion Potential) and lower GWP (Global Warming Potential) compared to conventional refrigerants.

Working Principle

1. Product Composition & Operating Principle

This product consists of key components including an inverter compressor, centrifugal fan, evaporator, condenser, electronic expansion valve, solenoid valve, air filter, housing, and controller. Its working principle is: The centrifugal fan directly draws indoor return air into the indoor unit, where the air undergoes temperature and humidity control through the interaction with the humidifier, evaporator, and condenser. The condensed water flows into the drain pan and is discharged outside, while the conditioned air is delivered into the wine cellar. This cycle continues until the temperature drops to the set point and humid spaces gradually achieve a dry effect. During winter, the unit also provides heating function to effectively raise the temperature in the wine cellar. The outdoor compressor can operate with variable frequency under different conditions, while the outdoor fan simultaneously runs with variable speed, ensuring the system operates at optimal COP efficiency to maintain stable temperature and humidity conditions in the wine cellar.

2. Product Features Overview

The unit's core components are made of renowned brand parts, equipped with pressure protection, temperature protection, anti-freeze protection, and current overload protection, along with multiple operation and fault display functions, ensuring safe and stable operation. The heat exchanger is precision-manufactured using imported processing equipment, offering high heat transfer efficiency, compact structure, low vibration, quiet operation, high cooling/heating capacity, low failure rate, and long service life.

1) Cooling Function
High-temperature, high-pressure eco-friendly refrigerant R32 gas enters the condenser, where heat is expelled outdoors, condensing it into a high-pressure liquid at room temperature. The liquid then passes through an electronic expansion valve, throttling into the evaporator, where it absorbs heat from the air passing through, turning into a low-temperature, low-pressure gas. The air flowing through the evaporator is cooled below its dew point, causing condensation and reducing absolute humidity. The conditioned air is then blown into the room by the supply fan. The refrigerant is sucked back into the compressor for re-compression, completing the cycle.

2) Heating Function
In winter, the compressor starts, and the wine cellar's return air is drawn into the unit by the centrifugal fan. The air is then heated by the indoor coil (acting as a condenser), raising the indoor temperature, while the humidification module adjusts humidity levels.

3) Dehumidification
When humid air passes over the evaporator, its temperature drops below the dew point, causing water vapor to condense. The condensed water collects in the drain pan and is discharged through a drain pipe. The controller automatically adjusts compressor runtime based on the user's preset humidity requirements, ensuring precise humidity control.

4) Humidification
Using an eco-friendly wet curtain, the system atomizes water and delivers it into the room via high airflow, effectively increasing humidity levels.

Dimensions and Technical Data

Unit Dimension / Model: VHSN-J15

Indoor Unit

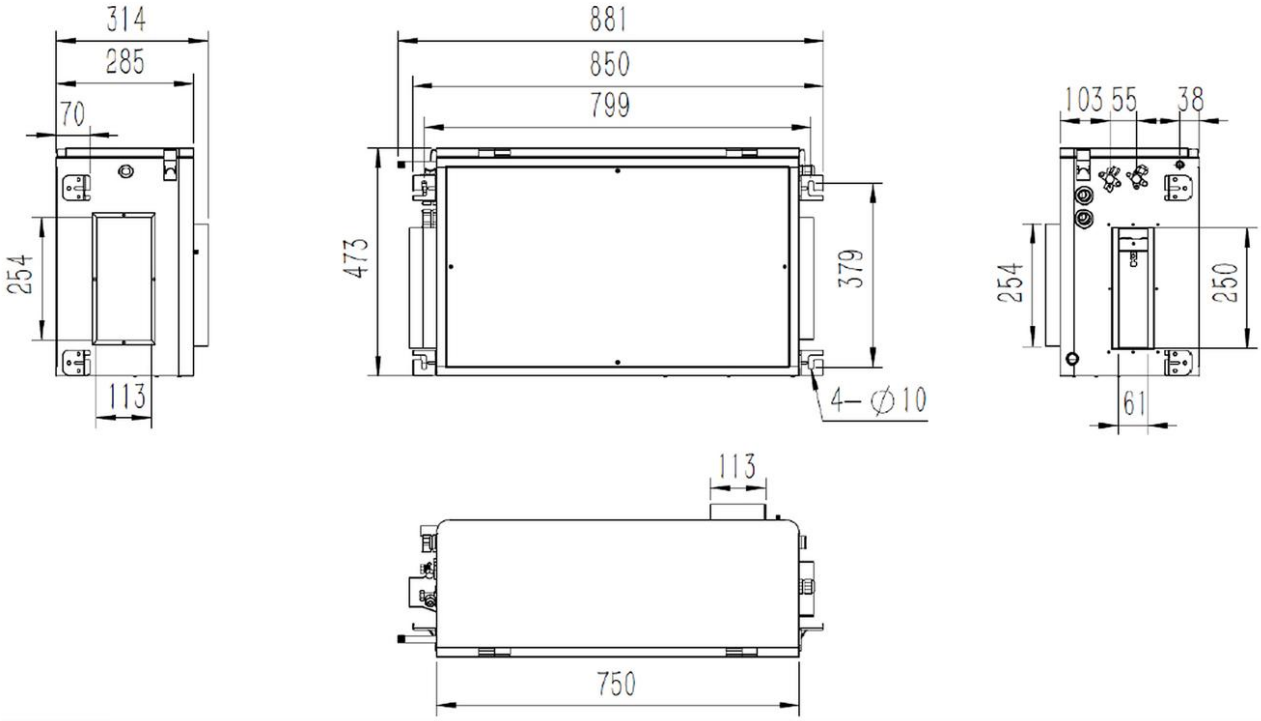

Outdoor Unit

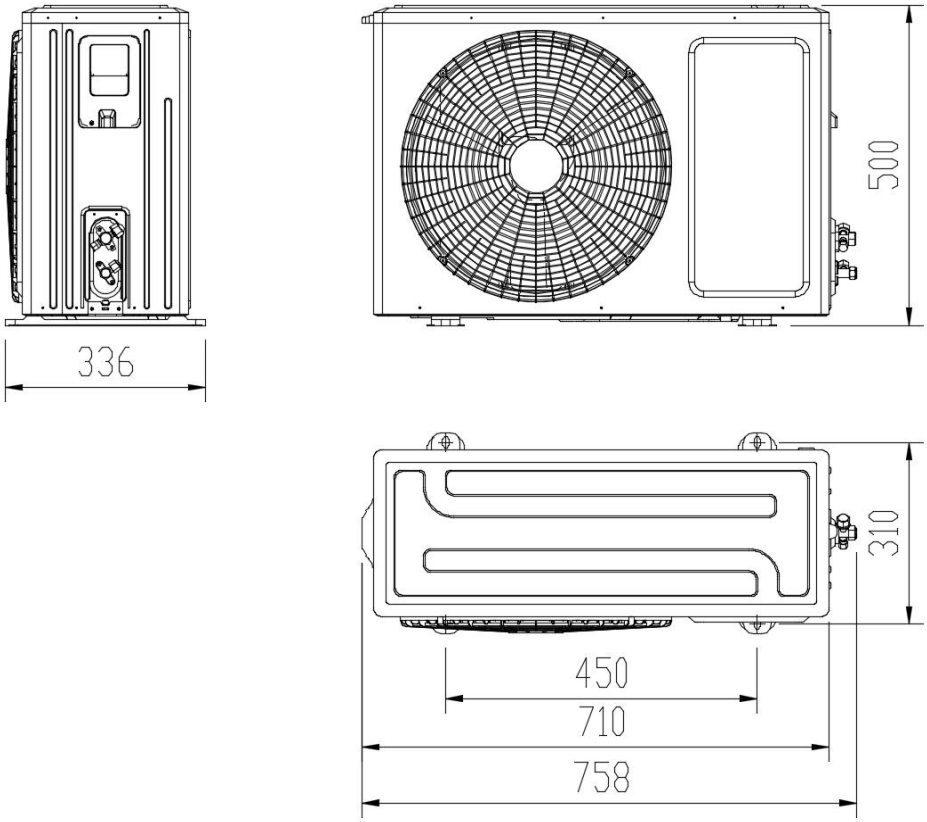

Technical Data

Performance / Moedel		VHSN-J15
Power	/	220V/50Hz
Cellar Size	m^3	5～15
Horse Power	P	0.5
Cooling Capacity A	kW	0.8
Cooling Capacity B	kW	1.9
Heating Capacity	kW	2.3
Air Flow	m^3/h	300
Static Pressure	Pa	30
Nosie	dB(A)	38
Controller	/	PC Full-touch smart control
Temperature	℃	10～18，±2
Humidity	%RH	50～70，±5
Total Power	kW	0.73
Humidifier	Type	Wet-film
Indoor Unit Size	L*W*H（mm）	881*473*314
Outdoor Unit Size	L*W*H（mm）	758*336*500
Connection Tube Size	mm	Liquid6.35/Gas9.52

Note:

1. Cooling **Capacity A** Test Conditions:

Indoor (Wine Cellar): Dry-bulb temperature (T) = 12° C, Relative humidity (RH) = 60%

Outdoor: Dry-bulb temperature (T) = 35° C, Relative humidity (RH) = 60%

2. Cooling **Capacity B** Test Conditions:

Indoor (Wine Cellar): Dry-bulb temperature (T) = 27° C, Relative humidity (RH) = 60%

Outdoor: Dry-bulb temperature (T) = 35° C, Relative humidity (RH) = 60%

3.There are several factors such as glass,stone,concrete,insulation,ambient temperature,ventilation etc. which will change the required amount of Kw needed to properly cool your wine room or wine cabinet. We strongly recommend you contact us or our distributors beforehand to help choose the model suitable. We do not bear the losses caused by the selection errors caused by the above reasons.

Installation and Debugging

IMPORTANT NOTES FOR INSTALLATION

When building a wine cellar, it is essential to insulate it. Traditional building materials such as brick, concrete and glass are NOT good insulators. Failure to insulate your custom wine cellar will essentially put additional load on the conditioning system & void manufactures warranty. Cellar space MUST be insulated with Kingspan K17/K18 (or equivalent insulation panels).

Any glass doors/windows/panels must be double glazed argon gas filled min 6mm/12mm/6mm.

Calculated M3 measurement of the cellar MUST be less than the highest capacity the unit is engineered to service.

Identify gas pipe run in the user manual to ensure horizontal & vertical measurement meets recommendations

No other equipment that can expel heat, such as fridges, should be housed in the cellar space as it will compromise temperature & humidity control.

All trades involved with installation must be registered:

- HVAC technician
- Plumber
- Electrician

The units are to be installed as recommended allowing ease of access for any future maintenance for both indoor and outdoor units.

Transportation and Installation Site Requirements

1. Transportation Precautions

- Before moving, ensure the hoisting equipment is reliable—do not use worn or damaged lifting gear.
- Plan the correct transportation route in advance to minimize handling frequency. Whenever possible, move the unit as a whole to avoid damaging its external structure.
- Do not remove the packaging before reaching the installation site. If removal is necessary, handle with extreme care to prevent scratches or damage.
- During hoisting, follow the instructions on the packaging and use two protective boards to prevent deformation or damage.
- To protect the product, keep it in its original packaging during transport. If unpacking is unavoidable, use protective wooden or cardboard panels to shield the unit.
- Avoid collisions with walls, pillars, doors, or other objects to prevent damage.
- Maintain the unit in a horizontal position during transport—do not tilt beyond 15°.

2. Installation Site Requirements

- Do not install the unit in areas with excessive dust, pollutants, corrosive gases, or high humidity.
- The installation site must provide sufficient space for heat dissipation and easy access for maintenance personnel.
- After positioning, place anti-vibration pads between the unit and the base, then secure it with anchor bolts.
- For outdoor units, ensure proper drainage to prevent water accumulation, which could affect the surrounding environment.
- Avoid installing the unit in direct sunlight, rain, wind exposure, or near direct heat sources.

Pre-installation Inspection

Use caution when lifting and check package for damage

A. Check the outer packing for breakage.

B. Machine model (nameplate), check whether it is consistent with what you ordered.

C. The appearance of the whole machine is intact.

D. A shipment may include one or more boxes containing accessories, please check all shipped boxes for the following contents.

Note: Each model of the Thenow ceiling-mounted split cooling system contains two wooden boxes-- the indoor unit case and the outdoor unit case. For details, please refer to the label affixed to the box.

Indoor unit case includes:

-- 1 Fan-coil unit
-- 1 Return air flange
-- 1 Control panel
-- 1 Mounting kit
-- Insulation cotton (6pcs)

Outdoor unit case includes:

-- 1 Condensing unit
-- Gas tube 3m

Remove the unit from box. Check for any signs of concealed damage, and that all mentioned items above have been provided. Contact Thenow or its authorized distributor immediately if components are missing or damaged during transportation.

Warning: Our company is not responsible for any accident caused by opening the panel and electric control cabinet without the permission of the company.

⚠ *Important Note:*

If the units arrived without gas, during the transportation of air conditioners, nitrogen has been used for pressure preservation, the steps for adding refrigerant before use typically include the following stages:

1. **Pressure Test for Leak Detection:** Initially, a pressure test is conducted to check for any leaks in the air conditioning system by pressurizing it with a certain amount of nitrogen and observing whether the pressure remains constant. If there is a pressure drop, leaks need to be located and repaired.

2. **Vacuuming:** After confirming there are no leaks, the next step is to vacuum the system. A vacuum pump is used to remove non-condensable gases and moisture from the system's pipes, ensuring the interior is dry and clean. The vacuuming process typically takes about half an hour until a vacuum degree of -0.1MPa or higher is achieved.

   Operating Steps：

   2.1 On the controller's Parameter Query page, Turn on the Vacuum Mode (see Figure A).

   2.2 Perform the vacuuming procedure.

   2.3 After evacuation is complete, go to the Parameter Query page, and turn off the Vacuum Mode (see Figure A).

   Note: Code for checking Advanced data-9595

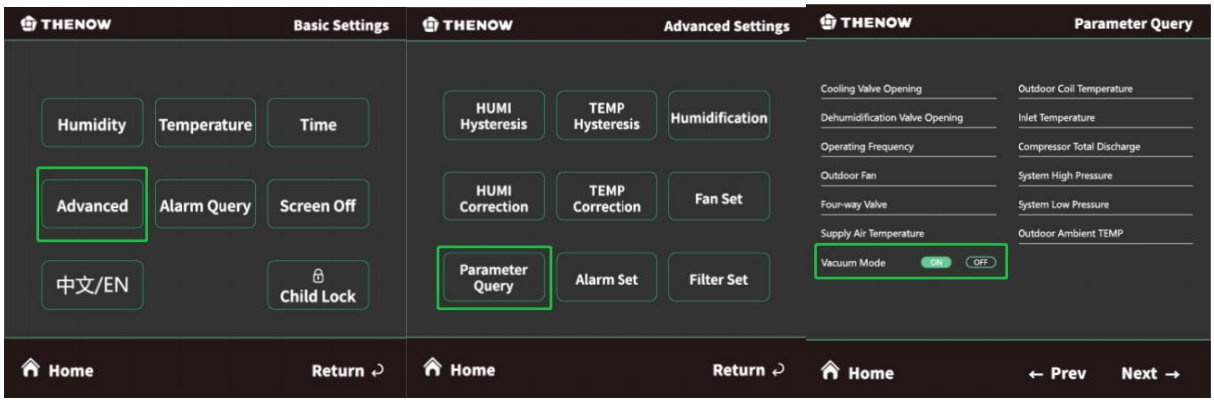

Figure A

3. **Adding Refrigerant:** Once the system has been vacuumed and the required vacuum level is confirmed, you can start adding refrigerant. The refrigerant should be added through the refrigerant injection port. If there is no reserved refrigerant injection port, it should be added from the high-pressure port. Be sure to expel the air from the injection hose to prevent air from entering the system.

4. **Weighing Charge Method:** The most accurate method of charging is the weighing charge method, which involves weighing the amount of refrigerant added to ensure it complies with the manufacturer's specifications(Charging weight indicated on the nameplate of the machine).

5. **System Commissioning:** After adding the refrigerant, the air conditioning system needs to be commissioned to ensure it operates normally.

Please note that these steps **MUST** be carried out by professional air conditioning installation or maintenance technicians to ensure safety and effectiveness. Throughout the process, it is strictly forbidden to use oxygen for pressurization, as contact between oxygen and the refrigeration oil in the system may cause an explosion. Also, changes in ambient temperature can affect the pressure of nitrogen, necessitating appropriate pressure correction.

Installation Sketch

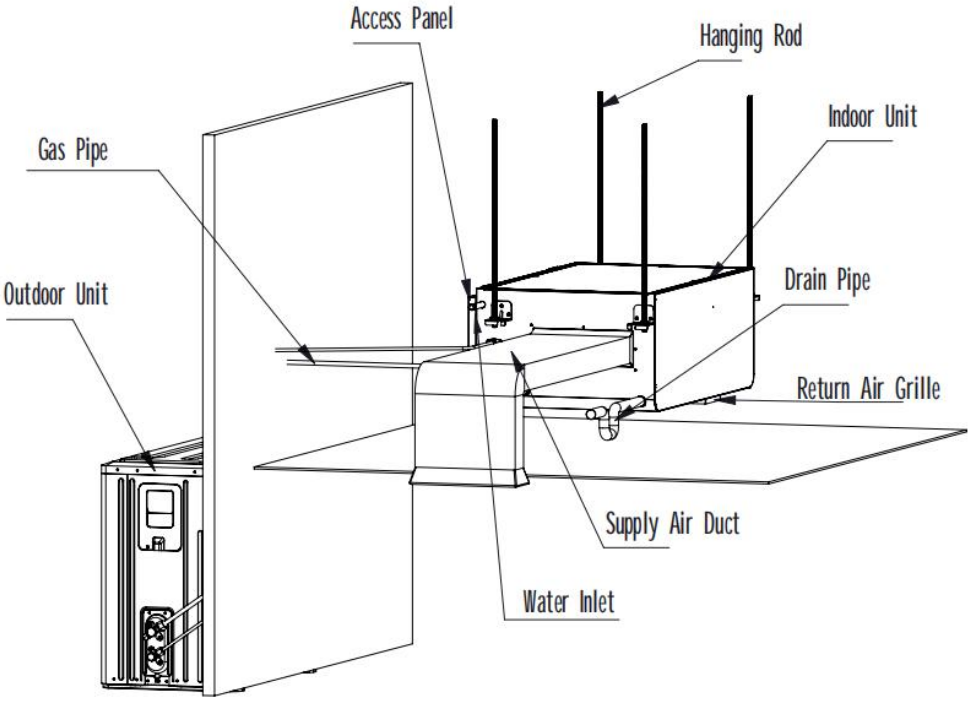

Important Notes

- A rigid pipe must be used for the condensate drain; its tapered thread must mate with the flexible hose.
- A separate valve must be installed on the humidifier water inlet pipe to regulate the water flow rate of the machine's water pipe or to shut off the water in case of machine malfunction.
- Suspend the indoor unit with threaded rods and nuts; mount the outdoor unit on a wall bracket (tripod).
- All duct work (return and supply) must be well insulated, regardless of material.
- Extend the refrigerant copper lines as needed.

Installation Conditions

Indoor unit:

1. When the machine is hoisted, the lifting bracket must be vertical and the install surface is flat. Meantime, the ceiling joists must be able to bear the weight of the unit.
2. To keep good ventilation and easy maintenance,requires that there must be more than ≥400* 600mm maintenance space around and at the top of the equipment.
3. Never install the unit in danger areas,such as strong magnetic,steam,dust,heating source,corrosion and combustible gases etc.
4. **No less than 15mm thickness insulation cotton** needs to be added on indoor unit surfaces (including gas tube) to prevent condensate water.

5. Never reduce the diameter of the drainage pipe by yourself when installing the drain line.

6. Recommended materials for commonly used air duct:

A: Thermal insulation board, 30mm thickness.

B: Stainless steel air duct, 30mm insulation outside.

Outdoor Unit:

1. Good heat dissipation must be ensured.

2. The load-bearing capacity of the unit installation frame shall not be less than 4 times of the unit weight.

3. If mounting in the ground, the unit must above normal snowfall levels.

4. The condensing unit shall not be installed in a common area such as aisles, corridors, and exits inside the building.

5. The condensing unit should be as far as possible away from the adjacent doors and windows and green plants, and the distance between the door and the window shouldn't be less than 3 to 4 meters.

6. The copper pipe must be insulated, and the thickness of the insulation cotton is ≥15mm.

Installing the Indoor Unit

1. Position the unit so that all routine and future maintenance can be performed without obstruction,restricted access will void the warranty.

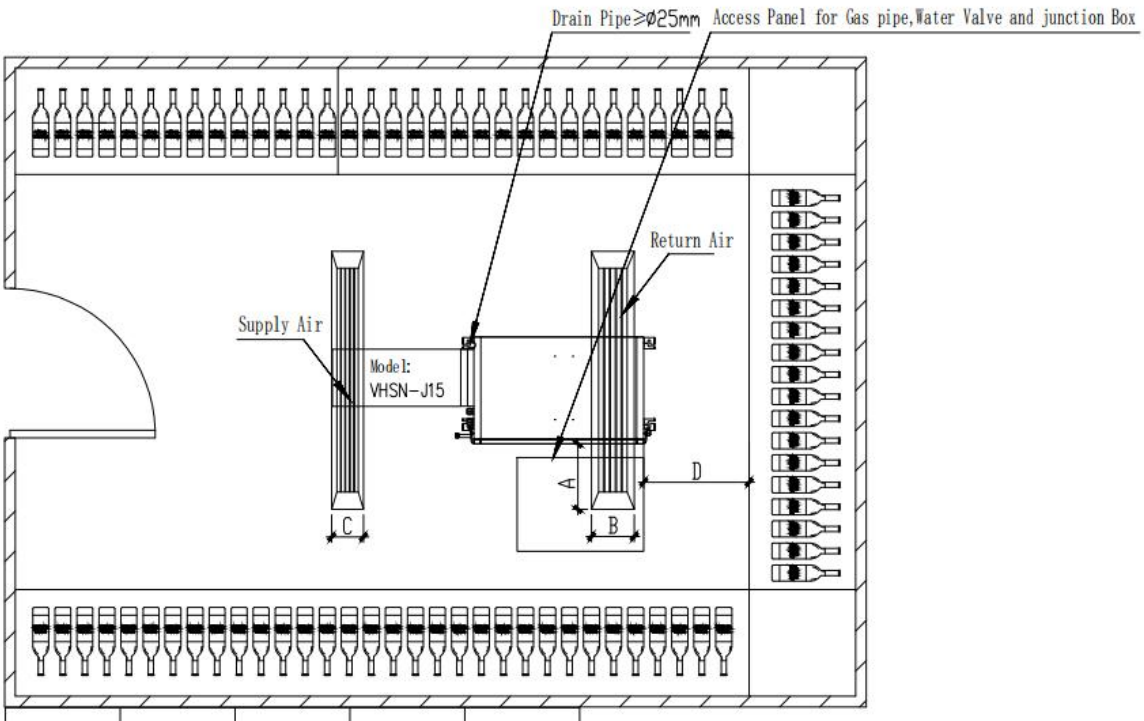

Item	A	B	C	D
Size	≥300mm	≥200mm	150mm	≥400mm

2. Select a mounting point capable of supporting at least five times the unit's operating weight to minimize noise and vibration. An inadequate structure may cause the unit to fall and result in serious injury.

3. At the planned location, drill four Ø10 mm holes through the ceiling slab. Drive M10 expansion bolts into the holes, tap each bolt flush with a hammer, then tighten securely with a wrench.

4. Fasten the four combination expansion hangers to the indoor unit chassis using eight nuts with washers (installer-supplied).

5. Hoist the unit onto the ceiling-mounted bolts and lock it in place with the supplied special securing nuts.

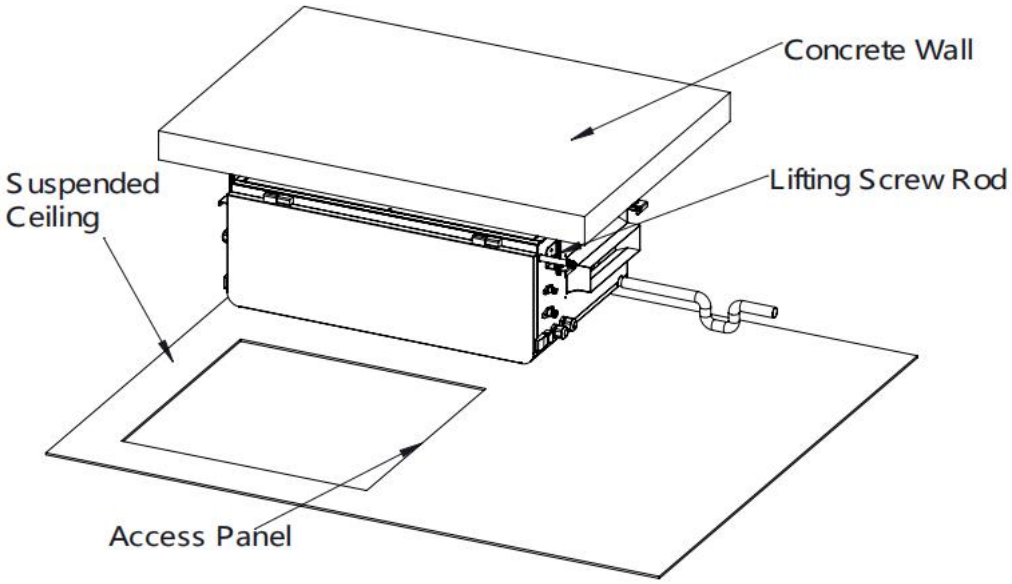

6. Cut the required openings in the ceiling (for return or supply air) and reinforce the surrounding ceiling as needed to maintain a level surface and prevent vibration. Consult the owner or builder regarding any joint issues. If the ceiling is not sufficiently rigid, fabricate a support frame from angle iron and mount the unit on this frame.

7. Apply **30 mm thick insulation** to the entire outer surface of the indoor unit—including the refrigerant pipes (already wrapped with 15 mm insulation)—and to all external duct work to prevent condensation.

8. It is recommended that after installing the solenoid water valve on the machine, the customer should purchase a separate valve. One end of the valve should be connected to the solenoid water inlet valve, and the other end should be connected to the tap water. The valve switch can be used to conveniently control the humidifier's water flow, ensuring that the water supply pressure remains within the range of 0.15 MPa to 0.35 MPa. Otherwise, if the water pressure is too high, it may cause water leakage in the equipment, preventing it from operating properly. The recommended adjustment range for the valve opening under standard water pressure for model VHSN-J15 is 1/4.

Note:

1. Water pipe length **not exceed 2 meters**, and make sure smooth drainage too.
2. Use distilled water whenever possible; if unavailable, tap water is acceptable. Avoid hard water to minimize scale build-up, which impairs humidification performance.
3. Humidifier water-supply pressure must remain within 0.15 – 0.35 MPa.

Important: After the initial setup of the equipment, do not adjust the water supply pressure. If the pressure is changed for any reason, you must immediately reset the valve opening to restore the proper humidification water flow. Thenow is not responsible for any damages or malfunctions caused by incorrect operation.

Connecting the Indoor Unit, Outdoor Unit, Controller, and Water Valve

Before installing the outdoor unit, complete all preparatory connections (refrigerant lines, water-supply line, condensate-drain line etc.).

Note:

- PVC pipe can be used for the condensate drain. The inside diameter must be equal to or larger than the unit's condensate outlet. Keep the drain run as short as possible and maintain a minimum downward gradient of 2 % to ensure free flow. When routing a common drain for multiple units, the shared horizontal branch must sit 10 mm lower than each individual unit outlet. In this case, should use a heavier-duty (thicker-walled) pipe.
- The copper pipes should be connected horizontally and vertically, and the length and height difference of the pipes should be within the allowable range.
- The controller comes with a standard 3-meter cable, which is a 4-core wire with a cross-section of 0.75mm^2. If an extension is required for installation, use a cable of the same specifications. The total cable length must not exceed 10 meters.

As following, please refer to the appendix or contact with THENOW directly for the maximum connection distance of unit copper pipes and the supplementary refrigerant filling.
Note: All models come with 3-meter copper pipe and connecting wire, If the copper pipe is extended, additional refrigerant is required (see below for specific operations)

Appendix I: Refrigerant charge under default value of 3m distance between indoor unit and outdoor unit.

Model	Refrigerant	Reference Charge
VHSN-J15	R32	600g

Appendix II: Recommended distance between evaporator and condenser.

Model	Horizontal Distance	Vertical Distance
VHSN-J15	≦15m	≦3m

Note: You must consider the max. distance of the unit when increasing the distance.

Appendix III: If distance exceed 3 meters(actual installation distance must be in the scope of our max. value in the above sheet), extra refrigerant charge, please take reference of the below sheet.

Refrigerant Type: R32

Tube Size(mm)	Refrigerant charge per extra 1m
Φ6.35	22g

Installing the Outdoor Unit

1) Thenow outdoor unit must be mounted horizontally and the place must be with good heat dissipation.

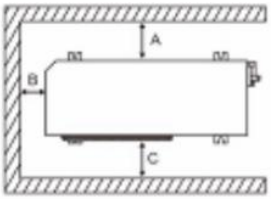

2) Back side distance A ⩾ 30 cm
3) Condenser side distance B ⩾ 30 cm
4) Front side exhaust air distance C ⩾ 2 m
5) Outdoor units are not allowed to be installed in public places such as aisles, corridors, exits, etc. inside the building.
6) The outdoor unit should be as far away from adjacent doors, windows and green plants as possible, and the distance from the other party's doors and windows should not be less than 4 meters, etc.
7) The thickness of copper pipe insulation can be 9mm within 3 meters, 15mm can be used between 3 meters and 10 meters, and the thickness of insulation cotton above 10 meters is ≥20MM.
8) Cables specifications: Power supply: 2×2.5 mm² + 1×1.5 mm²

Temperature & communication: 2×(3×0.75 mm²)

Wiring

Model: VHSN-J15

PCB

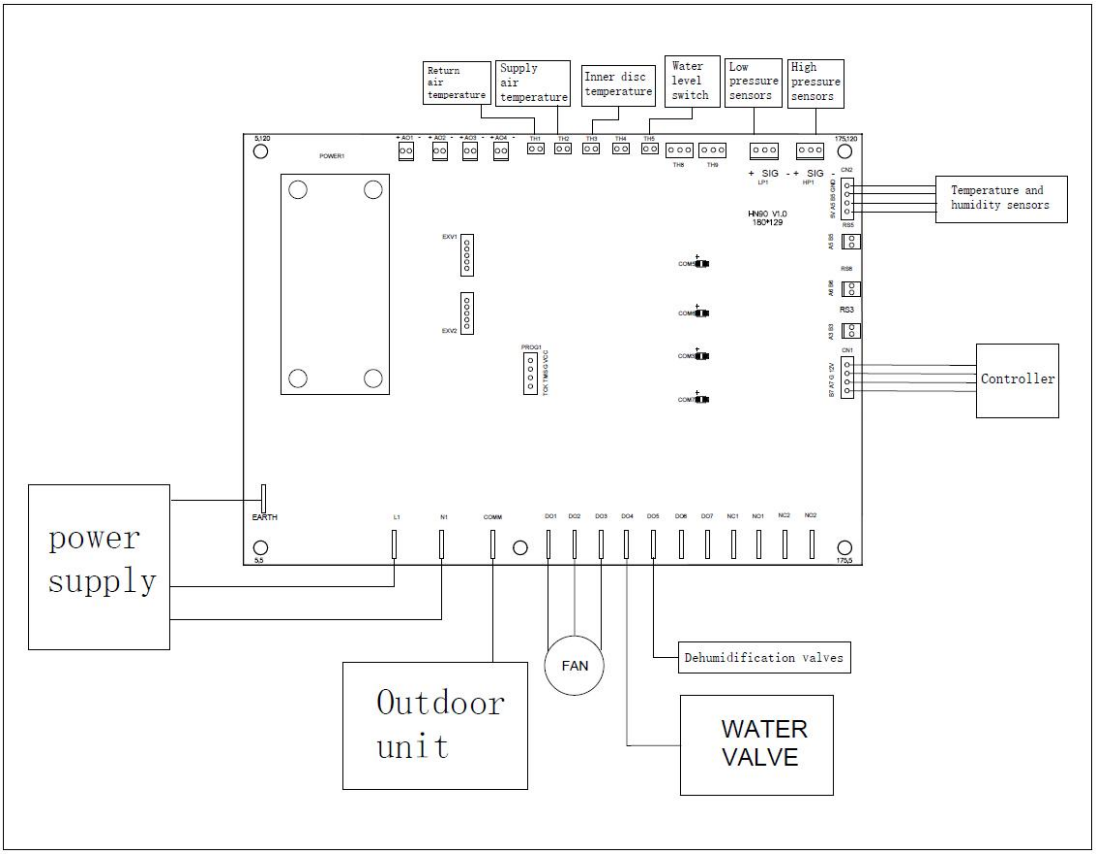

Indoor Unit & Outdoor Unit Connection

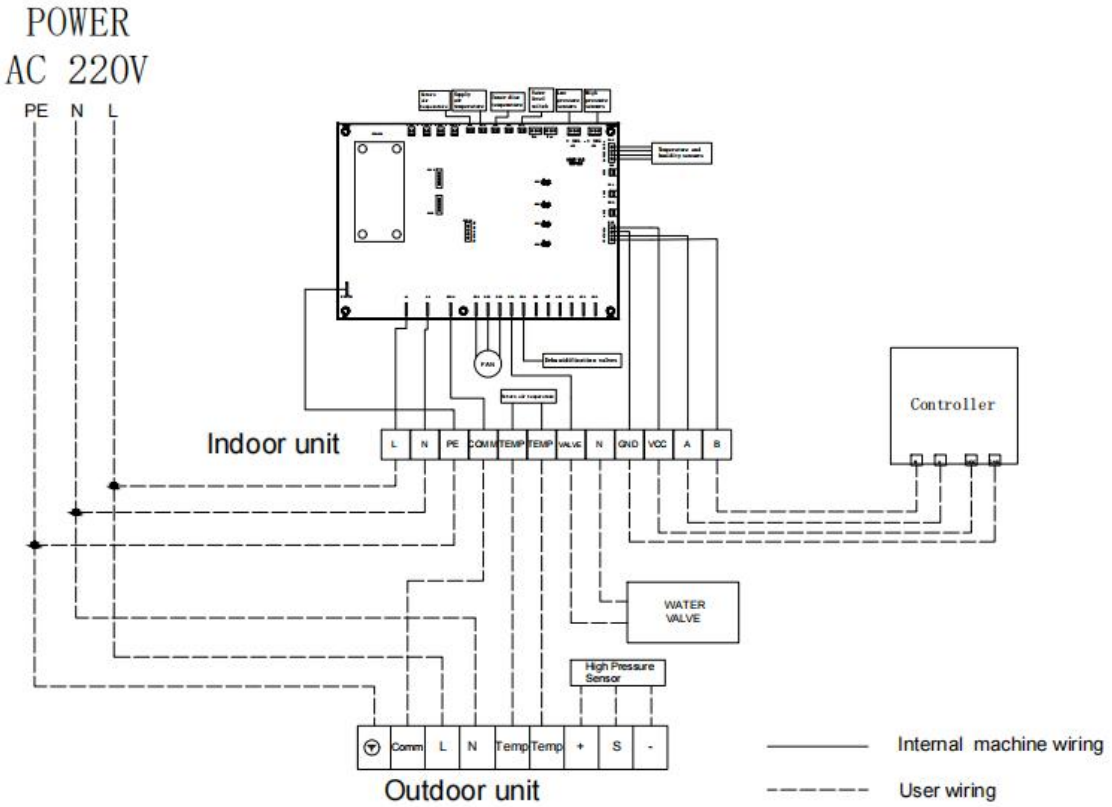

Online Debugging

Note: Always operate this machine from a 220V 1 phase or 3-phase 380V, 50Hz power source, and the fluctuation amplitude does not exceed 10%, the junction box capacity meets the equipment electrical using requirements; Take reference to the internal electrical schematic diagram of the unit, connect the indoor unit and outdoor unit, and ensure that the unit is effectively grounded; The unit requires a **90-second reset** during initial power-on or after a power failure restart. Normal operation will begin once the reset is complete.

1. Power the machine.
2. Set the operation mode, temperature and humidity (For setting methods, please check the operation section of the controller in the user manual)
3. Humidity setting value is 95% (higher than the ambient humidity) and temperature is set at 8℃ (lower than the ambient temperature), the setting operation mode is auto. Then cooling, heating and humidification will be calling automatically according to the setting value.
4. Keep the machine running at least 30 minutes.

After the machine runs for 30 minutes:

1. Check the alarm record. If all functions work well, no alarm record will be generated.
2. Check the machine for leaks. In case of leakage, first check whether the drainage is smooth. If so, reduce the opening of the ball valve to reduce the inlet water pressure. Run the machine for half an hour again and check whether the leakage problem is solved.
3. Check whether the temperature is lower than that when the machine is started. Generally, the coil temperature is reduced by 5-14℃ as the normal range.
4. Check whether the humidity is higher or the same as when the machine is turned on.
5. If the cooling, heating and humidification of the equipment can operate normally and there is no water leakage, the debugging work is completed.

Note:

After transportation or moved, it needs to be allowed to stand for more than 24 hours before it can be turned on. The system is designed to maintain a cellar temperature of 10-18℃ as long as the outside ambient temperature does not exceed 43℃ or no less than 5℃.

TIPs: Save your box and all packaging materials, they provide the only safe means of transporting/shipping the unit .

Introduction of Controller

Controller Introduction:

The controller for Thenow inverter split wine cellar air conditioner is a new-generation intelligent controller, it realizes intelligent control of constant temperature and humidity for a wine cellar and wine cabinet cooling units,which is widely used in precise temperature control places with small volume.

The controller adopts 4-inch large -screen colorful display technology,timing control,automatic/manual control of air flow speed , automatic operation of the appropriate air flow speed , comfortable energy saving , accurate and reliable.

Functional features:

1. With 4-inch capacitive full-touch display, clear picture and easy to operate.
2. Real-time display of temperature, humidity and clock .
3. Fan speed manual/automatic control selection.
4. Multiple operating mode options.
5. Built-in advanced parameter settings,manufacturers can freely set according to different customer needs.
6. Standard 86 mounting bottom case for quick and easy installation.

Technical Specifications:

Power Supply	PCB：AC220V±10%　50/60HZ
	Display：9～36V　Typical value 12V
Shall Material	Flame retardant ABS+PC
Power	<5W
Pich of Installation	60mm
Size	PCB：180mm×125mm
	Display：86mm×87.2mm×16.9mm
Storage Environment	-20~70℃　10%~90%RH
Working Condition	-10~60℃　10%~90%RH

Please connect in strict accordance with the product wiring diagram, wiring must be disconnected from the power supply, if any abnormality occurs, please cut off the power supply and contact the manufacturer as soon as possible. Non-professionals should not disassemble it in order to avoid danger.

Product installation:

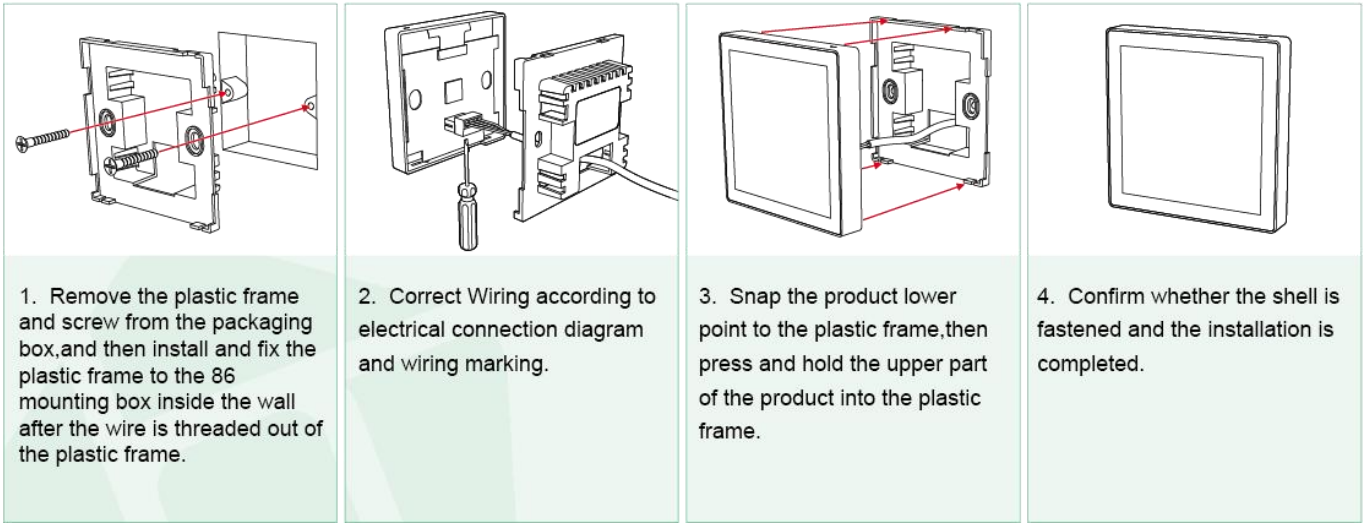

1. Remove the plastic frame and screw from the packaging box,and then install and fix the plastic frame to the 86 mounting box inside the wall after the wire is threaded out of the plastic frame.
2. Correct wiring according to electrical connection diagram and wiring marking.
3. Snap the product lower point to the plastic frame,then press and hold the upper part of the product into the plastic frame.
4. Confirm whether the shell is fastened and the installation is completed.

4-inch Control Screen

Tap any menu, and the system will instantly switch to the corresponding control interface.

1 TimePower On/Off

2 Set Working Mode

3 Setting Temperature

4 Setting Humidity

5 Running Status

6 Coil Temperature

7 Working Mode Selection

8 Fan Running Mode

9 Fan Speed

10 Cellar Temperature

11 Cellar Humidity

Operation Instruction

Turn system ON/OFF		Touch the switch icon in the lower left corner to turn on or off the unit. Color white is off and blue is on
Set temperature		1. Touch icon 'Set' 2. Find 'Temperature', click to enter and set temperature
Set humidity		1. Touch icon 'Set' 2. Find 'Humidity', click to enter and set humidity
Set time		1、Touch icon 'Set' 2、Find 'Time', click to enter and set time
Mode		Touch icon 'mode' to choose the running mode, default value is 'Auto'.
Fan Running Mode		Touch icon next to the switch, choose the running mode of the fan at 'Auto' or 'Manual'.
Set the fan speed (Only available at the fan work under "Manual"running mode)		Touch the fan icon to change the fan speed.
Alarm Query		1. Touch icon 'Set' 2. Find 'Alarm Query', click to enter and check fault.
Screen Off		1. Touch icon 'Set' 2. Find 'Screen Off', click to enter and set time. Value '0' means screen will always on.

Child Lock		1. Touch icon ‘Set’ 2. Find ‘Child Lock’, click to turn on/off it.
Language Setting		1. Touch icon ‘Set’ 2. Find ‘中文/EN’, click to choose the language
Advanced Settings	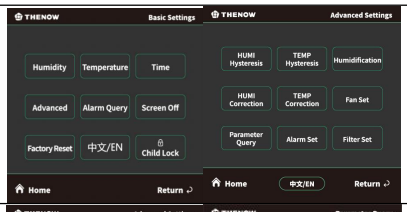	1. Touch icon ‘Set’ 2. Find ‘Advanced’, click to enter. 3. Click and set the datas as requests
Vacuum the System	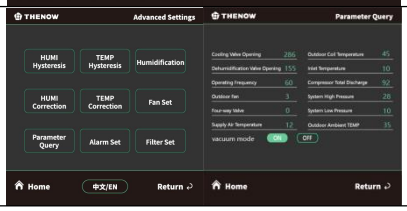	1. Enter ‘Advanced’ as advanced settings 2. Find ‘Parameter Query’, click to enter 3. Find

Maintenance

Using Requirements

1. Standard operating environment: –7 °C to 42 °C. Use the equipment strictly within the specified environmental and temperature limits.
2. Please make certain power supply is specified voltage, it's strictly prohibited to operate equipment with phase missing or under voltage.
3.This product is a non-explosion-proof product. Please do not use the unit in the environment with flammable or explosive gas.
4. It is forbidden to disassemble, process, modify or repair the machine without authorization. Otherwise there is a danger of abnormal movement, electric shock or fire.
5 .If the equipment has not been used for a long time, please make sure to turn off the power.

Cleaning

Disconnect electric power from the appliance before any operation, otherwise there will be the risk of electric shock.

1) Because the temperature probe is a sensitive element,in dusty place,please use low pressure water to clean regularly (for example,with the dust ball blowing wash),when the accuracy become poor ,please correct or replace.
2) Always check if the contact between the electrical plug and the socket of the machine is good. If the power lead wire or plug is hot when the machine is running, it may be that the electrical wiring is too thin or the plug or socket is in poor contact. Measures should be taken to solve it.
3) Always observe if there is refrigerant leakage at the interface of the refrigerant circuit of the machine. If there is oil stain, it means that the refrigerant leaks out, it should be treated in time to avoid leakage of the refrigerant for a long time, which will affect the refrigeration (heat) effect of the air conditioner and even cause damage to the compressor.
4) Clean the condenser and evaporator coils of the machine regularly. Use a brush and a vacuum cleaner to clean the dust on the coil. Note that the brush and vacuum cleaner should be cleaned in the vertical direction of the coil during cleaning. Do not sweep in the horizontal direction to avoid damaging the ribs of the coil.
5) During operation, the condensate water produced by the air conditioner can easily foster bacteria and microbes, forming biological slime (a gel-like substance). This can lead to blockages in the drain pan and pipes, resulting in water leakage. To ensure normal operation, it is recommended to clean and maintain the condensate drain pan and pipes annually.
6) Clean the air filter of the machine regularly. It is usually cleaned in about 3 to 6 months (depending on the site conditions). When cleaning, pull out the filter and use a dry soft brush to filter the dust on the net. It can also be cleaned with water to filter dust on the net.

Operation:

- Open the access panel and rotate the electrical control box.
- Remove the filter bracket and take out the primary filter.

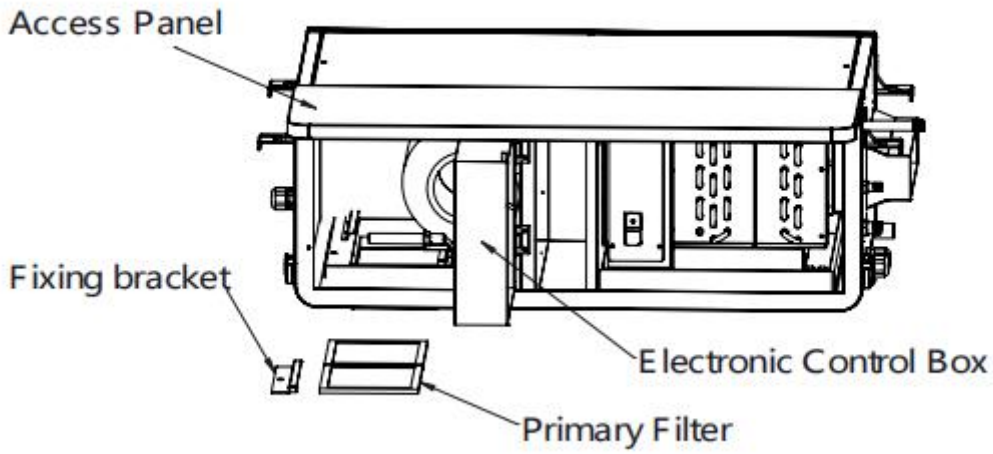

Do not replace the filter while the machine is working

Troubleshooting

WARNING

Disconnect electric power from the appliance before performing any maintenance or repairs,failure to do so could result in death or electrical shock.

- If maintenance is needed, wait for 3 minutes after power failure (let capacitor discharge on PCB), and then open the maintenance door.
- The surface temperature of the condenser may be very high. Do not touch it to prevent burns.
- Even if the fan and compressor have stopped ,there is still a dangerous voltage at the terminals of the starting capacitor.

The below information is for reference only. If the machine fails to work properly, please contact your local dealer or your local authorized repair station.

All electrical installation and maintenance work in this manual must be performed by a professional electrical engineer.,our company is not responsible for opening the panel and electric control cabinet without the permission of the company.

Troubleshooting & Maintenance Table

Status	Reason	Suggestion
Control screen is off	Incorrect wiring	Connect each terminal to its corresponding position.
	The switching power supply is faulty	Replace switching power supply
	The controller is faulty	Replace controller
	The mainboard is faulty	Replace mainboard
Unit trips at start-up	Incorrect power cord or breaker sizing	Replace power cord/breaker to meet specifications.
Poor temperature/humidity control	Clogged filter	Replace the filter.
	Improper temperature set-point	Adjust the wired controller or its settings.

	Door/window open, large heat loss	Close doors and windows.
	Excessive indoor heat sources	Reduce heat sources.
	Refrigerant leak	Contact qualified technicians for repair.
	Compressor or fan not running	Check whether the compressor or fan is operating.
Unit can not start	No power supply	Check the circuit and switch power on.
	Voltage too low	Check the unit's input voltage.
	Incorrect or loose wiring	Inspect all wiring harness connections.
	Blown fuse	Replace the fuse.
	Cannot restart immediately after shutdown	Normal system self-protection delay,wait a few mins.
	Damaged components	Replace relevant parts according to fault codes.
	Communication failure	Check wiring per the fault code.
Excessive noise	Unstable installation	Re-install the unit securely.
	Loose parts	Inspect and tighten components.
	Foreign objects in the air duct	Remove debris and dust from the duct.
	Deformed/damaged fan blades or abnormal compressor noise	Contact service personnel for replacement or repair.
Water leakage	Blocked drain pipe	Clear the drain pipe to ensure it is unobstructed.
	Internal condensation	Have professional technicians inspect and repair.
	Excessive Humidification Water Inflow	Reduce the flow rate and volume of the humidification water supply.
	Continuous Humidification	Check the solenoid valve
	Poor insulation of the unit lead to excessive condensation	Apply insulation foam to the unit body
	Indoor unit installed at an angle	Re-level the unit.
Condensation on panel/casing	Damaged insulation	Repair or re-wrap insulation properly.
	Cold-air leakage	Seal leaks with aluminum tape or similar material.
High Pressure Alarm	Indoor unit shut-off valve not opened	Open the indoor unit shut-off valve

	Outdoor fan not operating	Check the outdoor fan
	Poor heat dissipation	Check for blocked vents and ensure condenser is dissipating heat effectively
	Excessive refrigerant	Recover some refrigerant
Low Pressure Alarm	Indoor unit shut-off valve not opened	Open the indoor unit shut-off valve
	Refrigerant leak or undercharge	Check for leaks and repair, evacuate and then recharge with refrigerant
	Prolonged low-temperature dehumidification in Auto mode	Switch to constant temperature mode
Refrigerant Leak	Loose connections or cracked solder joints due to vibration	Tighten connections or repair solder joint cracks
	Pipe corrosion	Replace with anti-corrosion pipes
	Aging/worn rubber components or pipes	Replace the components or aged pipes
	Improper installation	Ensure professional installation
Compressor Not Working	Abnormal power supply to outdoor unit	Check the power supply wiring circuit
	Communication fault between indoor and outdoor units	Check the communication wire connection
	Damaged outdoor unit circuit board	Replace the outdoor unit circuit board
Outdoor Fan Not Operating	Fan impeller jammed	Remove the obstructing foreign object
	Damaged outdoor unit circuit board	Replace the outdoor unit circuit board
	Motor failure	Replace the motor

Fault Code Table

Code	Fault Description
E1	System Parameter Error
E2	High Pressure Too High
E3	Low Pressure Too Low
E4	Indoor/Outdoor Unit Communication Fault
E5	Return Air Temperature and Humidity Sensor Communication Fault
E6	Exhaust Temperature Too High
E7	Low Current
E8	Water Level Fault
E9	Pre-Heating Temperature Fault
E10	Supply Air Temperature Fault
E11	Filter Clogged
E12	External Memory Fault
E13	Supply Air Temperature Sensor Communication Fault
E14	Outdoor Coil Temperature Too High
E15	Compressor Overcurrent
E16	Compressor Start Failure
E17	Low Pressure Sensor Fault
E18	Suction Temperature Fault
E19	High Pressure Sensor Fault
E20	Low Suction Superheat
E21	High Suction Superheat
E22	High Return Air Temperature

Warranty

Limited Warranty

The machine provided by our company is guaranteed for one year and the fan is guaranteed for two years and the compressor for three years from the date of arrival. During the warranty period, any defects due to workmanship or materials, we guarantee to repair or replace the machine free of charge. (warning: the machine due to the use of dust ,corrosive liquid and other non-machine quality reasons for damage is not covered by the warranty.

Thenow company guarantee the project for 1 year, the fan is guaranteed for 2 years and the compressor for 3 years from date of delivery. During the warranty period, any defects due to workmanship or materials Thenow guarantee to repair or replace the machine free of charge.

Warranty Claims

Proof of insulation (photo images & specification) will be requested on warranty claims.
If access to the unit is hindered this will also void technicians labour on warranty claims and/or refusal to undertake works until the unit is moved to meet installation guidelines.

Warning the machine is not covered by warranty if the unit is installed within the guidelines stated above & in the user manual and is not maintained by regular cleaning of the condenser for removal of dust, has been misused, abused or neglected, has any contact of corrosive liquid, and other non-machine quality reasons for damage.

Remove - Commitment in after-sales service

During the warranty period, our company is responsible for the maintenance of the equipment，if the equipment exceeds the warranty period, our company will charge for reasonable maintenance cost.

Other preferential terms

Our company provides free technical advisory services to users.

Thenow Australasia

Unit 10
38 Corporate Blvd
Bayswater Vic 3153

www.thenowair.com.au

Email: info@thenowair.com.au
Tel: 1800 934 015